BOUNTIFUL POLICE

Family Emergency Handbook
for
Bountiful City

2005

Prepared by Bountiful Police Department

Table of Contents

Plan . . . Prepare . . . Be Informed 4

Neighborhood Watch 5

Map of Bountiful City 6

PLAN 7
- Individual Household Information 8
- Family Preparedness Checklist 9
- Family Member Information 10
- Neighborhood Groups 12
- Neighborhood Information 13
- House Plan 15
- Evacuation Plan 17
- How Does Your Home Measure Against Burglary? 18
- Utility Shut Off 20

PREPARE 21
- Water Storage 22
- Food Storage 23
- 72 Hour Emergency Kit 24
- Infants, Toddlers, Senior Citizens, Pets 25
- Other Emergency Kits 26
- Important Non Food Items For Storage 27
- Basic List of Medical and First Aid Supplies 28
- First Aid Basics 29
- CPR Basics 30
- Choking 31
- Alternative Heat, Light, Power Sources 32
- Sanitation 33
- Communications 34
- Essential Documents 34
- How To Make Your Home Safer During Earthquakes 35

BE INFORMED 38
- Emergency Basics 39
- In Case Of 40
- Utah Homeland Security 44
- Overview of Possible Threats 45
- Other Sources of Information 49
- Notification For Emergency Personnel 50

EMERGENCY PHONE NUMBERS 58

Family Emergency Handbook
2005

Before An Emergency Happens

Plan . . . Prepare . . . Be Informed

This handbook will help you and your family:

- **PLAN** for an emergency.
- **PREPARE** your home, supplies, and equipment for an emergency.
- **BE INFORMED** on what to do for the emergencies most likely to occur in our area.

It will also provide essential information to neighbors or emergency personnel who may be trying to help your family.

Complete your handbook!

- Designate a regular place for your handbook that is easily accessible for your family and others who will need access to the information it contains. (**above the refrigerator**)
- When placing the photographs in the information section, please note the age and date of the photograph. Periodically insert a more current photo.
- Write in pencil so you can make changes later.
- In the contact section, designate an out-of-state relative as the disaster contact. Inform all family members that everyone needs to check in with them and be sure everyone has their telephone number memorized and/or in their wallet to be able to make contact.
- Make a sketch of the floor plan of your home. Show the location of where to shut off all utilities. Note the locations of your essential supplies and equipment for an emergency so others can help you get what you need.

BOUNTIFUL POLICE DEPARTMENT

805 South Main, Bountiful, Utah 84010 · 801 298-6000 · FAX 292-6441

PAUL RAPP
Chief of Police

JOE L. JOHNSON
Mayor

Neighborhood Watch Coordinators
Committee Members

Bountiful City Police Department joined with the Bountiful City Community Council in establishing Neighborhood Watch throughout the neighborhoods of Bountiful. Most neighborhoods have already organized and several more are in the process. I would like to personally invite you to join our team of Neighborhood Watch Coordinators and Committee Members. This important effort was initiated by the Bountiful Community Council who represents our community at large. The Community Council's membership includes members of several different Bountiful religious organizations, educators, business, community leaders and others with a civic interest.

The Bountiful City Neighborhood Watch program encompasses not only Neighborhood Watch but Homeland Security and Emergency Preparedness. Having people in each neighborhood identified as the point person for these three critical areas are essential to the success and safety of our community. I would like to extend to you my invitation to participate in this vital community function. Please help us in assessing and ensuring the safety of our community. Your help as a Community Member or designated Neighborhood Watch Coordinator is essential to our safety and security. Please understand that Bountiful City supports and sponsors this Neighborhood Watch effort.

If you have additional questions as to what your responsibilities would entail, please feel free to contact me personally. I can be reached at my office, 298-6015. Thank you for your support and participation in helping to keep our community safe.

Sincerely,

Paul Rapp

PAUL RAPP
Chief of Police

BOUNTIFUL

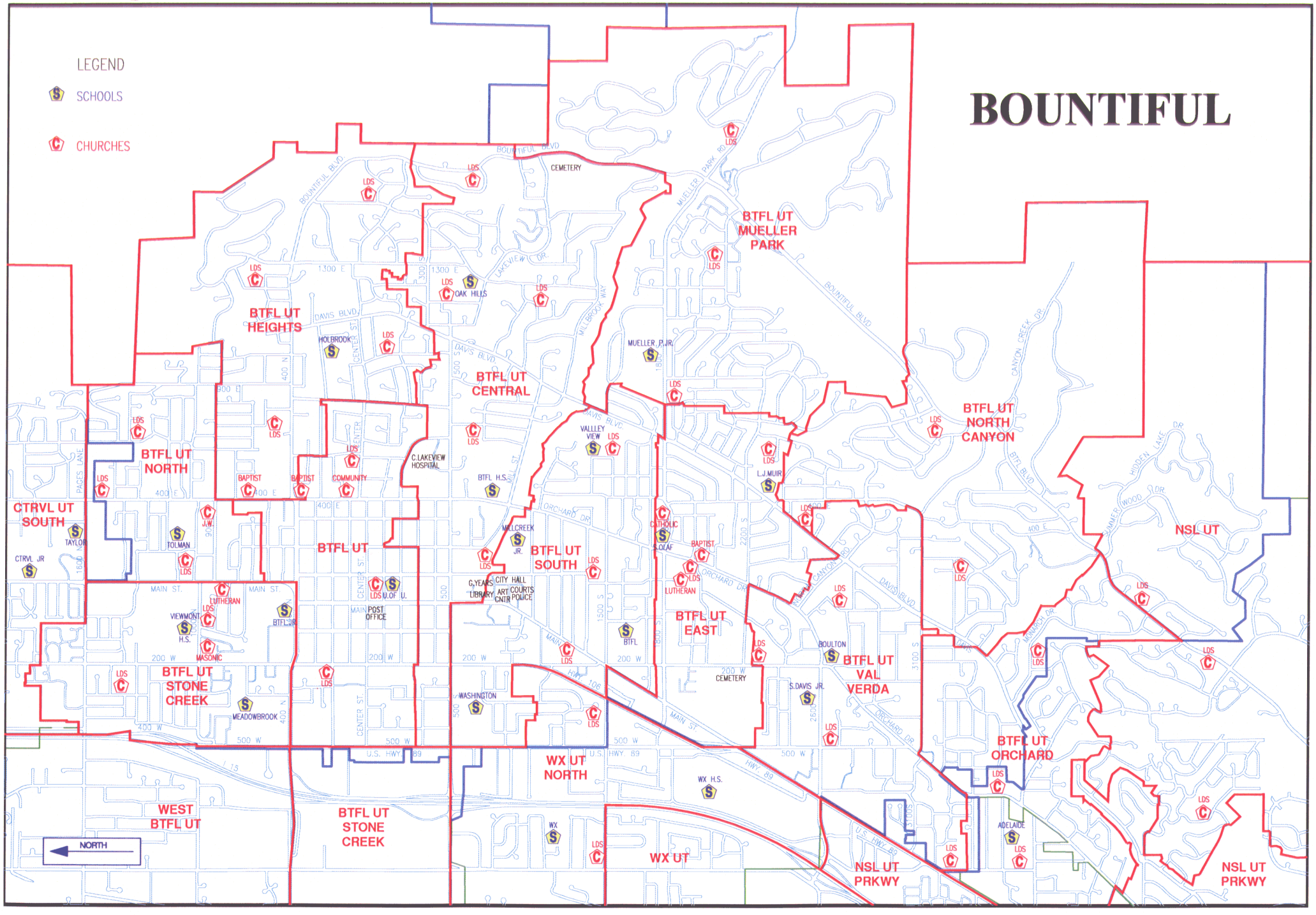
LEGEND
SCHOOLS
CHURCHES
BTFL UT HEIGHTS
BTFL UT NORTH
CTRVL UT SOUTH
BTFL UT STONE CREEK
WEST BTFL UT
BTFL UT STONE CREEK
BTFL UT
BTFL UT CENTRAL
BTFL UT SOUTH
BTFL UT EAST
WX UT NORTH
WX UT
BTFL UT MUELLER PARK
BTFL UT NORTH CANYON
BTFL UT VAL VERDA
BTFL UT ORCHARD
NSL UT
NSL UT PRKWY
NSL UT PRKWY
NORTH
BOUNTIFUL BLVD
DAVIS BLVD
MAIN ST.
ORCHARD DR.
MILLBROOK WAY
MUELLER PARK RD
CANYON RD
CANYON CREEK DR.
HIDDEN LAKE DR.
SUMMERWOOD DR.
MONARCH DR.
LAKEVIEW DR.
PAGES LANE
CENTER ST.
U.S. HWY. 89
HWY. 106
I-15
CEMETERY
OAK HILLS
HOLBROOK
MUELLER P.JR.
VALLEY VIEW
L.J.MUIR
C.LAKEVIEW HOSPITAL
BTFL H.S.
MILLCREEK JR.
CATHOLIC
L.O.L.AF
BAPTIST
LUTHERAN
COMMUNITY
TAYLOR
TOLMAN
J.W.
CTRVL JR
VIEWMONT H.S.
MASONIC
BTFL JR
MEADOWBROOK
WASHINGTON
G.YEARS LIBRARY
CITY HALL ART CNTR
COURTS POLICE
POST OFFICE
U.OF U.
BTFL
BOULTON
S.DAVIS JR.
WX H.S.
WX
ADELAIDE
LDS

PLAN

Individual Household Information

Address _____ **Phone** _____

Adult Household Members	B-Day	Work Phone	Cell Phone
1.			
2.			
3.			
4.			

Child's Name	B-day	Cell Phone	Child's Name	B-day	Cell Phone
1.			5.		
2.			6.		
3.			7.		
4.			8.		

Family meeting place outside the home (example: the mailbox) _____

Family meeting place outside the neighborhood (example: grandma's house, entry of school) _____

Emergency Contact (*Be sure to list one "Out-of-Town" Contact)

Name/Address	Relationship	Home Phone	Work Phone	Cell Phone

Emergency Care authorization: I hereby authorize the following individuals to make medical decisions on behalf of my family if I am unavailable in the event of an emergency.

Name/Address	Relationship	Home Phone	Work Phone	Cell Phone

Preferred Hospital _____ Health Plan _____

Group # _____ Medicare # _____

Other Medical Ins. _____

Preferred Pharmacy _____

Signed _____ Date _____

Family Preparedness Checklist

Meet with your family today and discuss why you need a preparedness plan. Explain the dangers of fire, flood, wind, earthquakes and chemical spill to children. Use this checklist to prepare your family.

- ☐ 1. Complete the Family Information forms in this book.
- ☐ 2. Make your house plan - mark the locations of utilities and emergency supplies.
- ☐ 3. Plan for an evacuation - list the most important items to take with you.
- ☐ 4. Teach older children how and when to turn off all utilities.
- ☐ 5. Evaluate your home security and plan how to improve it.
- ☐ 6. Check and rotate emergency water supplies.
- ☐ 7. Be able to purify unsafe water.
- ☐ 8. Take inventory of your food storage and make a plan to increase it.
- ☐ 9. Check and rotate your 72 hours "Go Kit." Store where it is easily accessible.
- ☐ 10. Check and rotate items in your First Aid Kit.
- ☐ 11. Take a First Aid Class: Learn CPR. Take a CERT class.
- ☐ 12. Make plans for emergency cooking, heating, and lighting.
- ☐ 13. Prepare a sanitation kit.
- ☐ 14. Check and recharge fire extinguishers if necessary.
- ☐ 15. Check and replace smoke and carbon monoxide detectors.
- ☐ 16. Bolt down water heaters, tall shelves and appliances ***before*** an earthquake.
- ☐ 17. Prepare financially by staying out of debt and saving for the future.
- ☐ 18. Replace batteries in emergency radios and lights.
- ☐ 19. ***Review your Emergency Plan with your family!***

PLAN - PREPARE - BE INFORMED - SURVIVE

Family Member Information

Name _____
Birth Date _____ Age _____
Cell # _____
Gender _____
Height _____
Weight _____
Hair Color _____
Eye Color _____
School/Employer
_____
_____
Phone _____

Allergies/Medical Condition
_____
_____

Medications
_____
_____

Name _____
Birth Date _____ Age _____
Cell # _____
Gender _____
Height _____
Weight _____
Hair Color _____
Eye Color _____
School/Employer
_____
_____
Phone _____

Allergies/Medical Condition
_____
_____

Medications
_____
_____

Name _____
Birth Date _____ Age _____
Cell # _____
Gender _____
Height _____
Weight _____
Hair Color _____
Eye Color _____
School/Employer
_____
_____
Phone _____

Allergies/Medical Condition
_____
_____

Medications
_____
_____

Name _____
Birth Date _____ Age _____
Cell # _____
Gender _____
Height _____
Weight _____
Hair Color _____
Eye Color _____
School/Employer
_____
_____
Phone _____

Allergies/Medical Condition
_____
_____

Medications
_____
_____

Family Member Information

Name _____
Birth Date _____ Age _____
Cell # _____
Gender _____
Height _____
Weight _____
Hair Color _____
Eye Color _____
School/Employer
_____
_____
Phone _____

Allergies/Medical Condition
_____
_____

Medications
_____
_____

Name _____
Birth Date _____ Age _____
Cell # _____
Gender _____
Height _____
Weight _____
Hair Color _____
Eye Color _____
School/Employer
_____
_____
Phone _____

Allergies/Medical Condition
_____
_____

Medications
_____
_____

Name _____
Birth Date _____ Age _____
Cell # _____
Gender _____
Height _____
Weight _____
Hair Color _____
Eye Color _____
School/Employer
_____
_____
Phone _____

Allergies/Medical Condition
_____
_____

Medications
_____
_____

Name _____
Birth Date _____ Age _____
Cell # _____
Gender _____
Height _____
Weight _____
Hair Color _____
Eye Color _____
School/Employer
_____
_____
Phone _____

Allergies/Medical Condition
_____
_____

Medications
_____
_____

Neighborhood Groups

1.	*Coordinator	1.	*Coordinator	1.	*Coordinator	1.	*Coordinator
2.		2.		2.		2.	
3.		3.		3.		3.	
4.		4.		4.		4.	
5.		5.		5.		5.	
6.		6.		6.		6.	
7.		7.		7.		7.	
8.		8.		8.		8.	
9.		9.		9.		9.	
10.		10.		10.		10.	

1.	*Coordinator	1.	*Coordinator	1.	*Coordinator	1.	*Coordinator
2.		2.		2.		2.	
3.		3.		3.		3.	
4.		4.		4.		4.	
5.		5.		5.		5.	
6.		6.		6.		6.	
7.		7.		7.		7.	
8.		8.		8.		8.	
9.		9.		9.		9.	
10.		10.		10.		10.	

1.	*Coordinator	1.	*Coordinator	1.	*Coordinator	**1.**	*Coordinator
2.		2.		2.		2.	
3.		3.		3.		3.	
4.		4.		4.		4.	
5.		5.		5.		5.	
6.		6.		6.		6.	
7.		7.		7.		7.	
8.		8.		8.		8.	
9.		9.		9.		9.	
10		10.		10.		10.	

1.	*Coordinator	1.	*Coordinator	1.	*Coordinator	1.	*Coordinator
2.		2.		2.		2.	
3.		3.		3.		3.	
4.		4.		4.		4.	
5.		5.		5.		5.	
6.		6.		6.		6.	
7.		7.		7.		7.	
8.		8.		8.		8.	
9.		9.		9.		9.	
10.		10.		10.		10.	

Neighborhood Information

Family Address & Phone #	Those Living at Home	Emergency Contacts & Special Instructions	
Name: **Address:** **Home Phone:** **Work Phone:** **Cell Phone:**	**Adults:** **Children:** **Pets:**	**Emergency Contacts:**	**Phone Numbers:**
		Special Instructions:	
Name: **Address:** **Home Phone:** **Work Phone:** **Cell Phone:**	**Adults:** **Children:** **Pets:**	**Emergency Contacts:**	**Phone Numbers:**
		Special Instructions:	
Name: **Address:** **Home Phone:** **Work Phone:** **Cell Phone:**	**Adults:** **Children:** **Pets:**	**Emergency Contacts:**	**Phone Numbers:**
		Special Instructions:	
Name: **Address:** **Home Phone:** **Work Phone:** **Cell Phone:**	**Adults:** **Children:** **Pets:**	**Emergency Contacts:**	**Phone Numbers:**
		Special Instructions:	
Name: **Address:** **Home Phone:** **Work Phone:** **Cell Phone:**	**Adults:** **Children:** **Pets:**	**Emergency Contacts:**	**Phone Numbers:**
		Special Instructions:	

Neighborhood Information

Family Address & Phone #	Those Living at Home	Emergency Contacts & Special Instructions	
Name: **Address:** **Home Phone:** **Work Phone:** **Cell Phone:**	**Adults:** **Children:** **Pets:**	**Emergency Contacts:**	**Phone Numbers:**
		Special Instructions:	
Name: **Address:** **Home Phone:** **Work Phone:** **Cell Phone:**	**Adults:** **Children:** **Pets:**	**Emergency Contacts:**	**Phone Numbers:**
		Special Instructions:	
Name: **Address:** **Home Phone:** **Work Phone:** **Cell Phone:**	**Adults:** **Children:** **Pets:**	**Emergency Contacts:**	**Phone Numbers:**
		Special Instructions:	
Name: **Address:** **Home Phone:** **Work Phone:** **Cell Phone:**	**Adults:** **Children:** **Pets:**	**Emergency Contacts:**	**Phone Numbers:**
		Special Instructions:	
Name: **Address:** **Home Phone:** **Work Phone:** **Cell Phone:**	**Adults:** **Children:** **Pets:**	**Emergency Contacts:**	**Phone Numbers:**
		Special Instructions:	

House Plan

It is important for every member of the family to know where important utility valves and shut-offs are located in the house. It is also important to know where important papers, emergency supplies and other important resources are stored. A simple floor plan of each floor of your home drawn on graph paper will be of great assistance. The following should be prominently identified on the floor plan:

Gas shut-off

Inside the house _____

Outside the house _____

Water shut-off

Inside the house _____

Outside the house _____

Electricity shut-off

Inside the house _____

Outside the house _____

Include primary and alternate routes of evacuation in the plan from all locations in the house. You should also identify the location of all smoke alarms and when batteries should be changed. These floor plans should follow this page.

It may be useful to include here any additional information that may be useful about your house such as:

- Previous owners of your home
- Diagrams of electrical wiring, cable, phone wires, plumbing, etc.
- Paint colors by room
- Date of significant modifications and improvements.

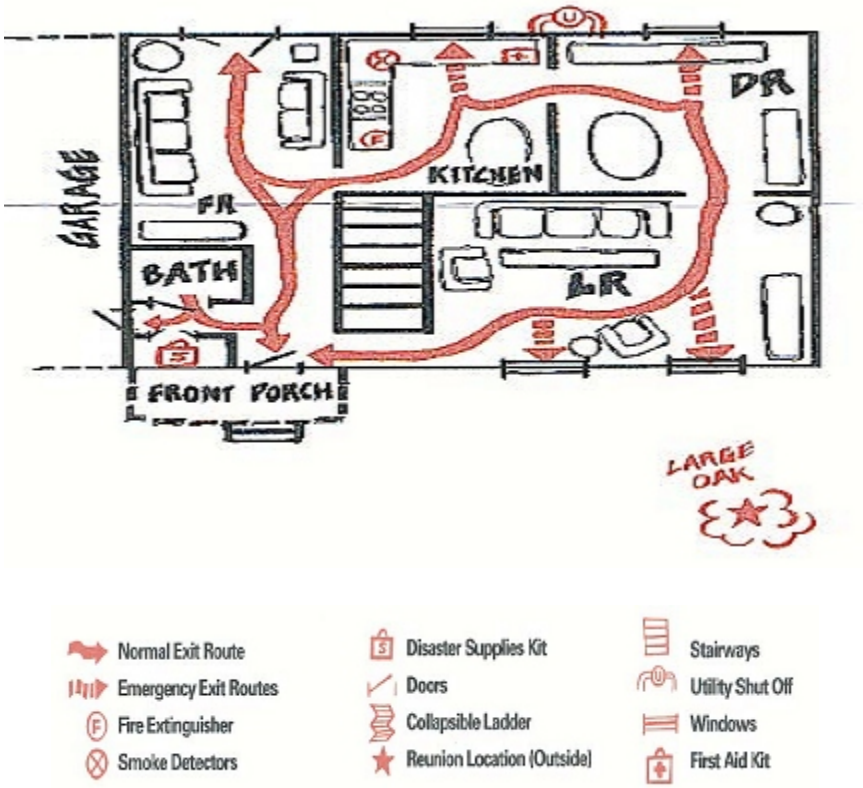

Evacuation Plan

The following suggestions are from FEMA.

- If you are asked to evacuate, please do so as quickly as possible.
- Wear protective clothing and sturdy shoes.
- Take your emergency kit, and medications for ***at least 72 hours***. Even though it may appear to you that you will only be gone a few hours, be prepared for longer. ***You may not be allowed to return home once you leave***.
- If possible, leash or cage pets and take them with you. ***Most shelters will not accept pets***. If you take them with you, be sure to take their food, water and other items they will need. A possible place to board your pet is: _____.
- Lock all doors and windows. Be sure ***all*** appliances (large or small) are turned off and all candles are out.
- Leave a note as to where you have gone and what family members are with you.
- Parents and children who are separated during an emergency creates one of the most stressful situations. Bountiful City is linked with the **National Center For Missing and Exploited Children**. Police protocol ensures a national link that will televise photos and names of missing children. Having your child's photo attached to this handbook is essential in helping the Missing Children Center get that information out!
- Follow travel routes recommended by local authorities to reach the "Evacuation Reception Center."
- Please go straight to the "Evacuation Reception Center" and ***check in.*** Let them know where you are going if you leave to go to another location (a relative's home, motel, etc.)
- ***Do not return home until local authorities say that it is safe to do so.***

You may be given a few minutes to gather some extra things. Plan ahead so you know what is most important to take with you. Think about things that are irreplaceable in case your home is destroyed and/or you are not able to return, such as journals, family photos, scrapbooks, family heirlooms, family records. Write down the things of top priority and their location.

1.	_____	11.	_____
2.	_____	12.	_____
3.	_____	13.	_____
4.	_____	14.	_____
5.	_____	15.	_____
6.	_____	16.	_____
7.	_____	17.	_____
8.	_____	18.	_____
9.	_____	19.	_____
10.	_____	20.	_____

How Does Your Home Measure Against Burglary?

Protect yourself and your neighbors in your area by starting a NEIGHBORHOOD WATCH PROGRAM .

	DOORS	Yes	No
1.	Are all outside doors made of solid core wood or metal and at least 1/4" in thickness		
2.	Are the locks on all your outside doors either the “deadbolt” or “jimmy-proof” type?		
3.	Are your door locks at least 40" from a window or a thin wood panel that may be broken out by a burglar?		
4.	Do you have a wide angle viewer (peep hole) on all exterior doors so you can identify the person at the door?		
5.	Do the exterior doors have heavy duty strike plates securely mounted with screws long enough to go through the door frame and into the wall?		
6.	Can all of your doors (main, basement, porch, French, balcony, patio, etc.) be securely locked?		
7.	Is your sliding glass door secure? (Place a strong piece of wood in the track, drill a hole through the inside frame and insert a nail to prevent sliding, or install locks designed to prevent sliding or lifting.		
8.	Do the doors to your basement exterior have locks?		
9.	Are all your locks in good repair?		
10.	Do you know everyone who has a key to your house?		
11.	Did you get all the keys from the previous owners of your house?		

	WINDOWS	Yes	No
12.	Are your window locks properly and securely mounted?		
13.	Do you keep your windows locked when they are shut?		
14.	Do you use locks that allow you to lock a window that is partially open?		
15.	Are you as careful about locking basement windows as you are about main floor windows?		
16.	Have you made it more difficult for the burglar by locking up ladders, avoiding placement of trellises that can be used as a ladder or similar aids for climbing?		

	GARAGE / STORAGE SHED	Yes	No
17.	Do you lock your garage and/or storage shed at night?		
18.	Do you lock your garage and/or storage shed when you are away from home?		
19.	Do you have good, secure locks on all garage and/or storage-shed doors and windows?		
20.	Do you lock your car and take the keys out, even when parked in your garage?		

How Does Your Home Measure Against Burglary?

	WHEN YOU GO ON A TRIP	Yes	No
21	Do you stop all deliveries or arrange for neighbors to pick up mail, packages, etc?		
22.	Do you notify a neighbor when you are leaving and how long you will be gone?		
23.	Do you contact the police department to see if they provide extra protection for a vacant home?		
24.	Do you leave some shades up and set 2 or more lights on timers so your home doesn't look deserted? Use timers daily, not just when you are away.		
25.	Do you arrange to have your lawn mowed or snow shoveled off walks and driveways?		

	SAFE PRACTICES	Yes	No
26	Do you plan so that you do not need to hide a key under the doormat?		
27.	Do you keep most cash and other valuables in the bank?		
28.	Do you keep a list of all valuable property?		
29.	Do you keep a list of the serial numbers of your TVs, VCRs, CD players, cameras, etc.?		
30.	Do you have a description or a picture of other valuables that do not have serial numbers?		
31.	Do you have all your valuables marked with your own personal ID number? Jewelry should have an Authenticity Certificate.		
32.	Have you told your family what to do if they should discover a burglar breaking in or already inside the house?		
33.	Have you told your family to leave the house undisturbed and to call the police if they discover a burglary has been committed?		
34.	Do you know the telephone number of the law enforcement agency in the area your home is located? (**Bountiful Police 298-6000**)		
35.	Do you have outdoor lighting that properly lights the outside of your home (motion detection activated, flood, or regular lighting?)		

	ALARM SYSTEMS	Yes	No
36.	Do you have an alarm system in your home?		
37.	Is the system in good working order?		
38.	Have you had a false alarm?		
39.	Do you know your neighbors and watch out for each other's property?		

Rate Yourself on Home Security

30 or more ***YES*** answers	You are pretty safe
20-29 ***YES*** answers	You could be burglarized
19 or fewer ***YES*** answers	High risk to be burglarized

Utility Shut Off

Know how to shut off all your utilities and where the shut-offs are, inside and outside the home.

NATURAL GAS

Sniff for gas leaks. If you smell gas or there is significant structural damage to your home, turn off the gas.

"DO NOT TURN OFF THE GAS IF NO LEAK IS SUSPECTED. If you turn the gas off, you will need a professional to turn it back on." FEMA

The meter shut-off valve is located next to the meter. Use a wrench to turn the valve a quarter turn in either direction to the "off" position. Notify the gas company or 911 of the gas leak. ***DO NOT*** attempt to turn the gas back on!!!

Depending on the severity of the emergency and the number of meters that have been turned off, you may have to wait some time for your gas service to be restored, even if there is no damage to the gas pipelines in your area.

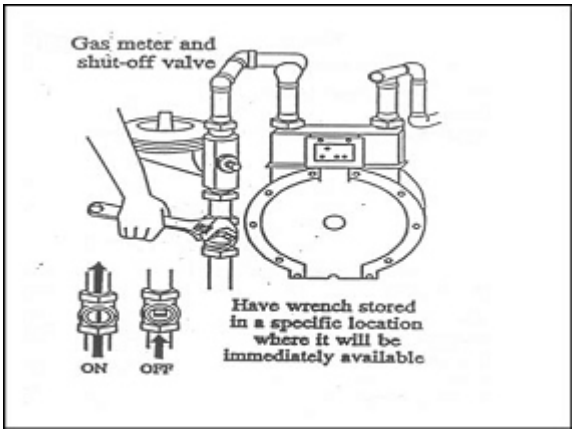

WATER

Shut off the main water valve to keep contaminated water from entering the house. If there are water leaks in your home or between your home and the meter, the water valves should be turned off to maintain pressure.

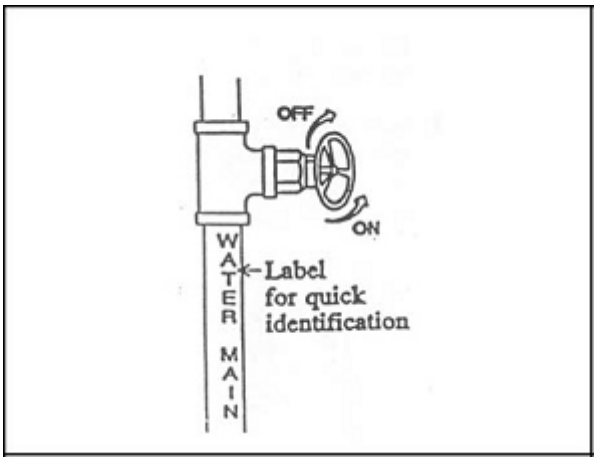

ELECTRICITY

If there are downed power lines **STAY AWAY. DO NOT TOUCH**! If you see or hear electrical sparking, **DO NOT TOUCH** or attempt to operate any electrical appliance or switches. If possible, locate the electrical service panel inside your home. Open the metal panel on the box and turn the switches to the "off" position or pull out the main fuse.

If you are unable to locate the internal service panel, or unable to get to it, find the electrical "meter" box on the outside of your house and turn the switch to "off".

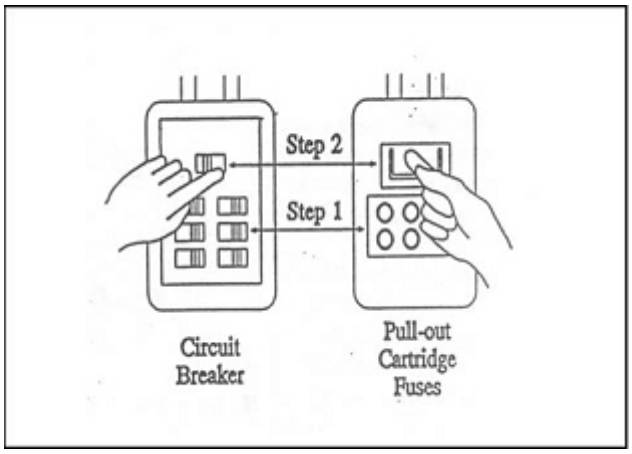

PREPARE

Water Storage

WHY - Water is more essential than food in sustaining life. Natural disasters may pollute or disrupt water supplies.

HOW MUCH - Store at least one gallon of water per person per day. Two quarts for drinking and two quarts for food preparation and sanitation. In hot weather, everyone may require more water. A minimum two-week supply of water is recommended for your home. 72-hours of water should be available in your **EMERGENCY GO KIT**. Store as much as possible, at least 14 gallons per person.

HOW - Store water in plastic food grade containers such as water and beverage bottles. Glass can break and cartons decompose. Water from water beds should be used for sanitation purposes only. **Do not** store water in chlorine bleach or milk bottles.

.

HOW TO PURIFY

1. **BOIL** vigorously for 3-5 minutes
2. Add unscented household bleach (5.25% sodium hypochlorite). Stir and let stand for 30 minutes. If the water does not have a slight bleach odor, repeat the dosage and let stand 15 minutes. Use fresh bleach.

Amount of Water	Clear Water	Cloudy Water
1 quart	2 drops	4 drops
1 gallon	8 drops	16 drops
5 gallons	½ teaspoon	1 teaspoon
55 gallons	2 Tablespoons	4 Tablespoons

3. Water Purification tablets (Halizone or potable agua.) Different types of tablets are available at drug stores or sporting good stores. Follow the manufacturer's directions. Do not use tablets that are yellowish in color have a strong odor. Don't use products that are past expiration dates.
4. Iodine: Use 2% tincture of iodine to purify small amounts of water. Add 3 drops per quart of clear water. Let stand 30 min. ***"Pregnant or nursing women or people with thyroid problems should not drink water with Iodine."*** *Dept of Environmental Quality Division of Drinking Water*
5. Water from swimming pools can be safely treated and used as drinking water. Let the pool water stand for at least 72 hours to reduce the chlorine level. Do not add chemicals to the pool during this time. Use a combination ceramic and carbon filter purifying pump/filter to extract water from the pool. This type of filtration system is effective in removing organic contaminates and enough chlorine to render the water safe to drink. Most of these filter types can safely convert up to 13,000 gallons of water before the filtration system needs to be replaced.

ADDITIONAL INFORMATION

- Stored water goes flat. Aerate the water by pouring it between two containers.
- Immediately after a major disaster, prevent contamination of home water supply by shutting off the main incoming water valve. If water from the tap looks cloudy or has an unpleasant odor, don't take a chance. **PURIFY BEFORE USING**.
- Clearly label and date all storage containers, especially those reused from other products.
- Consider canned soups, juice from canned fruits and vegetables, bottled soft drinks, bottled juice etc. as sources of liquid.
- Use water stored in the hot water tank, ice cube trays, toilet tank. (not the toilet bowl)
- Dirty water can be strained through paper towels or clean cloth to remove particulates. Boil and treat with chlorine bleach as directed.
- There is no effective way for home decontamination of water which contains radioactive or chemical contamination.

Food Storage

Use storage areas that are well ventilated, cool, dark, dry and clean.

These basic items should be considered for storage. They provide adequate calories, protein, vitamins and minerals. Note the approximate storage life and the suggested amount needed to sustain one person's life for one year (if no other foods are added).

THE BASICS			
Item	Storage Life	*Suggested Amount 1 adult per 1 year	Suggested Amount 1 adult per 1 month
Grains (wheat, flour, rice, corn, oatmeal, pasta)	Varies	400 lbs.	33.3 lbs
Legumes (dry beans, peas, lentils)	6-8 Years	60 lbs.	5 lbs.
Powdered Milk	2-3 Years	16 lbs. = 64 quarts	1.3 lbs.
Sugar, Honey	20+ Years	60 lbs.	5 lbs.
Salt	20+ Years	5-8 lbs.	0.5 lbs
Oil (shortening, butter, mayonnaise, peanut butter)	2+ years	20 lbs. - 10 quarts	1.6
**Water	Replace Yearly	14 gal/ person/2 week	

*These amounts are suggested by The Church of Jesus Christ of Latter Day Saints.
*Children's percentage of adult portion: 0-3 yrs+50%, 4-6 yrs+70%, 7-10 yrs = 90%
*Start using wheat and whole grains in diet regularly to allow digestive system to adapt to increased roughage.
**It is impractical for most families to store a year's supply of water. Fourteen gallons per person is a suggested minimum reserve.

Successful storage depends on several factors:

- Quality of products - obtain top grade food products when possible.
- Proper Containers - use heavy plastic, metal or glass with tight fitting lids.
- Storage areas - easy access, dark, cool, dry, free from rodents, insects/other pests.
- Temperature - food stores best at 40-60 degrees.
- Variety - provides better nutrition and avoids appetite fatigue.
- Rotation - date and rotate to minimize loss of food value and flavor, prevent spoilage.
- Inventory - Maintain a record of items used and added to.

Begin with the basics that are life sustaining and store well for long periods of time. Then add other foods for variety, interest and personal preference. Expanded storage could include such items as meats, fruits and vegetables, (canned, bottled, frozen, dehydrated, pickled or smoked). Also include spices, flavorings, cornstarch, baking powder, soda, and yeast.

Consider your family's likes and dislikes, allergies and needs when deciding what to store.

It's better to have food storage for a short period of time than none at all!

Store What You Eat
Eat What You Store

72 Hour Emergency Kit

Keep Calm - Don't Panic

The following emergency preparedness kit should be kept cool, dry, and readily accessible for rapid exit. It could be stored in easy-to-carry backpacks, duffle bags, suitcases, or 5 gallon buckets. Include a master list in the top of each kit with date prepared. A copy of this page with checkmarks or notes works well.

Water

1 gallon per person per day
Water Purification Tablets or chlorine bleach

Equipment

Adjustable Wrench - Hammer - Pocketknife
Battery Powered Radio (extra batteries)
Fire Extinguisher (very small)
Flashlights (extra batteries) - Light Stick
Folding Shovel
Plastic,2 sheets 9'x12' (shelter, ground cloth, water collection)
Rope (1/4 x 26')
Duct Tape
Tent - Tarp (Shelter)
Whistle - 1 per person
Work Gloves

Sanitation

Plastic Bucket with Tight Fitting Lid
Plastic Trash Bags (large & small, also zip locks)
Disinfectant (bleach, Lysol, powdered chlorinated lime)
Toilet Paper
Soap, Towel

Cooking / Heating

Aluminum Foil
Backpack Stove
Candles - 2 large
Can Opener - Manual
Dish Soap, dish cloth, towel
Knife
Matches in Foil or Waterproof Container
Mess Kit (1 per 2 people)
Pan for Cooking/Washing
Metal Cup - Pan, Can or Small Tin Pail
Paper Plates, Cups, Napkins, Plastic Utensils
Spoon & Fork - Metal for Mixing

Stress / Morale Boosters

Scriptures
Ball, Small Games, Crossword Puzzles, Cards
Hard Candy, Chocolate Chips
Harmonica / Needlework / Pictures
Paper, Pencils, Crayons, Permanent Marker

Food for 3 days

Baby Food - Baby Cereal - Formula - Juice
Beef Jerky - Canned Meats/Tuna/Spam
Candy - Hard Candy, Lollipops, Gum
Canned Fruits / Vegetables / Juice
Canned Foods / Chili, Pork &Beans, Ravioli, Soup, Spaghetti, Stew
Cereals (Oatmeal, Cracked Wheat)
Crackers - Cookies
Dry Soup Mix - Ramen Noodles
Dried Fruits - Raisins, Trail Mix, Fruit Roll-Ups
Granola Bars - Peanuts, Trail Mix
MREs (Meals Ready to Eat)
Peanut Butter, Jelly, Honey
Powdered Milk / Cocoa Mix

Clothing / Bedding

1 Space Blanket Per Person
1 Wool/Fleece Blanket or 1 Sleeping Bag Per Person
1 Change of Clothes
Underwear
Shoes, 2 Pair Socks (at least 1 wool)
Sweatshirt, Gloves
Infant's clothing, Pacifiers, Blankets
Disposable Diapers

Hygiene

Comb & Brush
Deodorant
Lotion
Feminine Hygiene Needs
Lip Balm, Chap Stick, Blistex, Tube of Vaseline
Nail Clippers, Nail File
Shaving Supplies
Shampoo
Small Mirror
Soap (liquid preferred; a soap bar needs a container)
Toothbrush / Toothpaste
Washcloth / Towel

Other

First Aid Kit
Insect Repellant / Sun Screen
Money (Coins, small bills, credit card)
Safety Pins, Needle, Thread, Scissors, Buttons
Extra Glasses
Extra Set of Car Keys

Keep the family's most valuable documents (or copies) in your emergency kit ready to pick up and take with you: deeds, mortgage, titles, insurance, wills, home contents & pictures, social security numbers, drivers license or ID cards, birth certificates, account numbers, genealogy, current pictures of family members, name, address & telephone number of out of state contact, etc. All this information could be put on one 3 ½" computer disk, CD or flash drive.

Infants, Toddlers, Senior Citizens, Pets

Infants and children have special needs in a 72 hour kit. Items should include:

Infants & Children

Their own bag & labeled with their name
Disposable Diapers (36-48 minimum)*
Disposable Wet Wipes*
Plastic Garbage Bags*
Two Changes of Clothes*
Two Pair Pajamas
Two Blankets
Hat, Gloves, Socks
Infant Formula (may be needed to supplement nursing babies)
Instant Baby Cereal
Canned Food/Juices (must be consumed at one meal to prevent spoilage)
Teething Biscuits & Orajel
Sterilized Water / Also Pedialyte
Plastic bottles (Label with Name)
Disposable Bottle Liners
Extra Nipples
Bib
Plastic Spoon & Bowl
Pacifier (Label with name)
Safety Pins
Baby Powder
Baby Oil
Diaper Rash Medication
Children's Tylenol
Assorted Toys (label with name)

The most critical aspect of infant care during emergencies is sanitation. Infants, by nature, become soiled and dirty from one minute to the next, thus providing excellent breeding grounds for disease-causing bacteria which may infect not only the infant but also adults that come in contact.

*For proper sanitation, it is important that you store a sufficient supply of disposable diapers, wipes, and garbage bags. Change infants regularly and keep them clean. Dispose of the soiled diapers in garbage bags and keep them tightly sealed to prevent spread of disease. Wash hands often.

Emergency diapering needs may be met by lining plastic pants with a scrap of cloth, tissue, paper towels, or other absorbent material.

Before the emergency, young children can help prepare and store supplies. Teach them about the warning sounds (smoke alarms, sirens, etc in your home & neighborhood)

Young children should memorize family name, address, and phone number as early as possible.

Children need extra reassurance. Take time to hold, cuddle, talk and listen to them. Encourage them to talk about their feelings. Keep them with the rest of the family. Be prepared to sing songs and play simple games such as I Spy; Duck, Duck, Goose; Button, Button; Lion Hunt, etc.

Senior Citizens

In addition to preparing a 72 hour kit:

- Arrange for someone to check on you.
- Have a plan to signal the need for help.
- Extra batteries for hearing aids, wheel chairs, extra oxygen, extra eyeglasses as needed.
- List the style & serial numbers of medical devices such as pacemakers and prepare a list of all medications & dosages.
- Teach those who may need to assist you how to operate necessary equipment.

Pets

Consider your pet's needs in planning for an emergency.

- Have a current ID tag, license.
- Keep their vaccinations current.
- Keep pet carriers, extra collars, leashes on hand to contain and calm your pet.
- Your pet needs a half gallon of drinking water per day.
- Store at least 2 weeks supply of food.

In case of evacuation, be aware that pets are not allowed in Red Cross emergency shelters.

Other Emergency Kits

Basic Minimal First Aid Kit

2 pairs of latex gloves
Sterile dressings to stop bleeding
Adhesive bandages in a variety of sizes
Cleansing agent or soap
Antibiotic ointment to prevent infection
Burn ointment
Tube of petroleum jelly or other lubricant
Eye wash solution to flush the eye
Triangle bandage
Waterless alcohol based hand sanitizer or Germicidal hand wipes
Thermometer
Scissors
Tweezers
Personal medications, including a list of all medications and dosages
Non prescription drugs (aspirin and non aspirin pain reliever, anti diarrhea medication, antacid, laxative, syrup of Ipecac)

Office Emergency Kit

Keep a backpack or tote bag under your desk for any emergency use. You could be stranded at your office for several days. Plan for at least 72 hours.

Blanket, flat sheet, pillow or sleeping bag
Change of clothes, underwear, socks, sturdy shoes
Coat or jacket, hat, gloves
First aid kit
Flashlight & extra batteries
Food - non perishable
Hygiene trial-size supplies
- lotions, soaps
- shampoo, conditioner
- toothpaste, toothbrush
- mouthwash
- toothpicks

List of family names and telephone #'s
Medications
Sweet hard candy
Towel, washcloth
Water in clear bottles
Whistle with lanyard to hang around neck

Car Survival Kit

Bag of sand or rock salt
Blankets or sleeping bag
Bottled water (2 Liter)
Candles
Car tool kit
- pliers
- screw driver
- hatchet
- folding shovel
- wire saw
- nails
- twine
- wire
- tape
- file

Always maintain at least a half tank of gas!

Clothes, including boots, socks, hat, etc.
Compass
Fire extinguisher (standard class ABC)
First aid kit and manual
Flashlight & extra batteries
Fold up stove & fuel tablets
Food - non perishable
Gloves (work gloves & rubber disposable gloves)
Ice scraper for winter season
Jumper cables
Map
Matches
Mirror
Paper, pencils
Pre-moistened towels
Portable radio & batteries
Reflectors, flares
Rope
Sewing kit
Short rubber hose for siphoning
Space blanket
Tissues
Tow rope
Waterproof matches
Whistle
Zip lock bags

Not all items are mandatory but all are useful!

Important Non Food Items For Storage

Tools

Adjustable wrench, hammer, nails
Ax, saw
Bailing wire, twine
Broom, dustpan
Bucket
Crowbar
Gloves (heavy work)
Pliers
Rope
Screwdrivers
Shovel
Tape (duct, plastic, electrical)
Tarps

Cooking

Aluminum foil (heavy duty & regular)
Bucket or dishpan
Canning lids, paraffin wax
Can opener (non-electric)
Camp stove, fuel
Charcoal, lighter fluid
Dish cloth, dish towel, scrubbie
Dish detergent
Napkins, paper towels
Paper plates, cups, utensils
Plastic wrap, wax paper, zip lock bags, coffee filters Pots, pans (at least 2)
Sharp knife
Utensils

Bedding

Blankets, quilts (enough to keep each person warm with no other heat source)
Pillows
Rubberized sheets
Sheets (flannel is warmer & more absorbent)
Sleeping bags

Clothing

Boots
Gloves
Jacket, warm coat
Poncho
Seasonal clothing
Shoes,
Socks 2 pair (at least 1 pair wool)

Safety Items

Batteries, many sizes
Candles
Flashlights
Fire extinguisher
Garden hose (firefighting, siphoning gas)
Insecticides
Lantern, fuel
Matches, lighters
Paper, pencils
Radio (battery operated)

Sanitation

Large trash can with tight fitting lid
Ammonia
Bleach
Clean rags
Disinfectant (Lysol, Pinesol, etc)
Newspapers (to wrap garbage & waste in, could also be used for fuel or blankets)
Plastic bags (various sizes especially garbage bags) Toilet paper
Wet wipes

Hygiene Supplies

Combs, brushes
Contact lens solution
Deodorant
Extra glasses, contacts
Feminine supplies
Hand soap (15 bars per person per year)
Infant supplies (disposable diapers, plastic pants, bottles)
Laundry detergent (25 lbs per person per year)
Shampoo, conditioner
Shaving supplies
Tissue
Toothbrush, toothpaste
Wash cloths, towels

Pets

Food
Leashes, collars
Litter box supplies
Medications

Basic List of Medical and First Aid Supplies

Bandaging

Ace bandages, assorted sizes
2", 3" 4" gauze rolls
Sterile dressing assorted sizes
1" tape, cloth, plastic or paper
Band-aid, a variety including:
- Assorted sizes of strips
- Butterfly bandages
- Extra large
- Fingertip/Knuckle

Sanitary napkins, individually packed
Super glue for wound closure
Triangular bandages

Colds

Antihistamine, decongestants
Cold medicine of choice
Cough lozenges and/or syrup
Vitamin C and others as desired

Disinfectants

Alcohol
Alcohol preps individually wrapped
Gel hand sanitizer, waterless
Hydrogen peroxide
Bar soap
Water purification tablets

Eye Care

Lubricating eye drops
Contact lens solutions
Ophthalmic antibiotic ointment –RX only

Gastrointestinal Relief

Antacids, liquid or tablets
Anti-nausea, i.e. Dramamine
Diarrhea medicine, i.e. Imodium
Glycerine suppositories
Laxative
Pepto Bismol and/or Alka-Seltzer

Insect bites and stings

Baking soda
Benadryl for allergic reactions
Calamine or Caladryl lotion

Ointments

KY jelly, water-soluble
Mentholatum
Petroleum jelly
Zinc oxide
Triple antibiotic ointment (Neosporin)

Pain Relief

Aspirin & non-aspirin pain reliever
Earache, toothache drops
Prescribed medicines, Tylenol drops for babies

Skin Rashes-Allergic reactions

Antihistamine tablets & syrup
Benadryl or Caladryl
Hydrocortisone cream
Prescribed medicines

Miscellaneous

Favorite home remedies
First aid manual
Lip balm
Insect repellent
Personal medications and equipment, i.e. insulin, and syringes, heart meds, etc.
Sun screen and block

Tools and Equipment

Container - tackle box, plastic box, etc.
Collapsible drink cup, paper cups
(Consecrated oil - if LDS)
Dental floss
Gloves, heavy-duty work or latex
Instant ice pack
Matches, waterproof container
Medicine dropper, dose cups
Q-tips
Penlight, batteries
Pocket knife, sharp
Pocket mask, other barrier device to use in CPR
Scissors
Bandage & heavy duty
Sewing needles, thread, safety pins
Splinting materials
Thermometer
Tongue depressors (many uses)
Tweezers

Make certain Medical and First Aid Kits contain all prescribed medicines.

First Aid Basics

First Aid and CPR

Classes are routinely available in the community through Red Cross. CERT classes are taught regularly and teach important disaster response skills. Plan to register for an upcoming class.

In addition, Emergency 911 dispatchers are trained and able to give patient care instructions while awaiting the ambulance. Stay calm and stay on the phone until they conclude the call upon the arrival of medical personnel.

The ABC's to providing first aid.

- **Airway**
- **Breathing**
- **Circulation**

Airway

Without proper airway positioning and maintenance, anything else you might try to do for the victim will be in vain. If the victim is conscious, talking or breathing normally, the airway is assumed to be clear. If snoring sounds are heard, it could signal a partially obstructed airway and steps must be taken to secure a better airway. If the victim is not breathing, make sure there are no obstructions in the victim's mouth and that the head is tipped back to open the airway. Reposition the victim on his or her back, making sure to keep the head in line with the spine, and turning the victim as one unit. Get help if possible

Breathing

If upon repositioning and securing the airway the patient does not start to breathe, begin rescue breathing.

Circulation

Circulation includes the pumping of the heart as well as controlling bleeding. If no pulse is detected, CPR is needed.

Most bleeding can be controlled by placing a bandage and applying direct pressure. If the bleeding is not controlled, do not remove bandages. Simply apply another layer of bandaging material. If bleeding is still not controlled, elevate the limb and/or applying pressure to the pressure points.

911 Procedures

Recognizing an emergency and taking action in the first few minutes can mean the difference between death or life-long injury and full recovery.

- Check the scene for safety. Do not become a victim of an unsafe scene! Make the scene safe before proceeding.
- Check the victim's level of consciousness or responsiveness, airway, breathing, circulation.

Call 911 and give the following information:

- Exact location
- Caller's name
- What happened
- How many are involved
- Condition of victim
- What help is being given

Call 911 if the victim:

- Is or becomes unconscious
- Has trouble breathing
- Has chest pain or pressure
- Is bleeding severely
- Has seizures, severe headache, slurred speech
- Appears to have been overdosed or poisoned
- Has injuries to the head, neck, back

Call 911 if the situation involves

- Fire or explosion
- Downed electrical wires
- Swiftly moving or rapidly rising water
- Presence of poisonous gas
- Vehicle collision
- Victims who cannot be moved easily

Care for the victim, reassure, and keep them warm. Watch for changes.

CPR Basics

INFANT

Access Responsiveness
Shout and gently tap the child on the shoulder. If there is no response, position the infant on his or her back

Because airway problems are the main cause of not breathing in infants and children, clearing the airway takes precedence over calling 911. For victims under 8, perform CPR for 1 minute, then call 911.

Airway
Open The Airway. Tilt the head lifting of chin. Do not tilt the head too far back. Clear any objects from the mouth. Look, listen and feel for breathing.

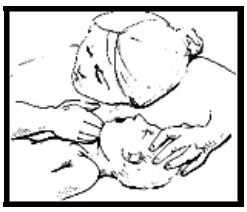

Rescue Breathing
If the baby is NOT breathing give 2 small gentle breaths (puffs). Cover the baby's mouth and nose with your mouth. Repeat 1 puff every 3 seconds. Each breath should be 1.5 to 2 seconds long. You should see the baby's chest rise with each breath. If air won't go in, reposition head and try again.

Chest Compressions
Give five gentle chest compressions at the rate of 100 per minute. Position your 3rd and 4th fingers in the center of the chest half an inch below the nipples. Press down only ½ to 1 inch.

CONTINUE WITH **1 BREATH AND 5 COMPRESSIONS**.

After one minute of repeated cycles **CALL 911** and continue giving breaths and compressions.

ADULT

Access Responsiveness____
If there is no response, CALL 911 and return to the victim.

Airway
Tilt the head back. Lift the chin. Clear any objects from the mouth. **Look, listen and feel** for breathing.

Rescue Breathing
If NOT breathing normally, pinch nose and cover the mouth with yours and blow until you see the chest rise. **Give 2 breaths.** Each breath should take 2 seconds. Continue rescue breathing: **1 breath every 4 to 5 seconds,** as long as pulse is present but person is not breathing.

Chest Compressions
If the victim is still not breathing normally, coughing or moving, begin chest compressions. Push down on the chest 1 ½ to 2 inches 15 times right between the nipples. Pump at the rate of 100/minute, faster than once per second.

In children (ages 1-8)

- Place one hand on forehead, the heel of the other hand in the center of the chest (so you don't push too hard) for chest compressions.
- Press the sternum down 1 to 1 ½ inches
- Give **1 full breath followed by 5 chest compressions**

FOR ADULTS CONTINUE WITH 2**2 BREATHS AND 15 PUMPS** UNTIL HELP ARRIVES

Note: This ratio is the same for one-person & two-person CPR. In two-person CPR the person pumping the chest stops while the other gives mouth-to-mouth breathing.

Choking

How to help clear and obstructed airway in a conscious adult or child.

INFANT

First aid for a Choking Conscious Infant (less than 1 year old)

Step 1: Determine if the infant can cry or cough.

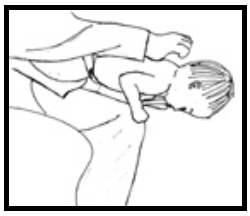

Step 2: **Tip the baby face down** on your forearm, supporting with your hand. Give 5 firm back blows between the shoulder blades with the heel of your hand.

If ineffective, turn the baby over and...

Step 3: **Give 5 chest thrusts** with index and middle fingertips

Step 4: Repeat steps 2 & 3 above until effective or the infant becomes unconscious.

If the infant becomes unresponsive, perform CPR - if you see an object in the throat or mouth, remove it.

ADULT

First aid for a Choking Conscious Adult and children (1 - 8 years old)

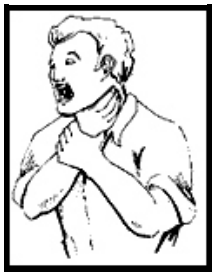

Step 1: Ask, "Are you choking?" Maintain eye contact. Assume "YES" if victim cannot breathe, speak, gasp, cough or make high pitched sounds.

Step 2: Perform Heimlich Maneuver:

From behind victim:

- Wrap arms around victim's waist.
- Make a fist, thumb side down, and grasp with other hand on victim's stomach, just above navel.
- Press fist into stomach and give quick, inward and upward thrusts until object comes out or victim becomes unconscious.

A chest thrust may be used for markedly obese persons or in late stages of pregnancy.

If the adult or child becomes unresponsive, perform CPR - if you see an object in the throat or mouth, remove it.

Alternative Heat, Light, Power Sources

Fire Starters

Matches (waterproofed), butane lighters, flint and steel, charcoal starter.

Fireplace, Open Flame (Campfire, Outside Fire Pit)

Suspend a Dutch oven over the heat by using a tripod, much like the early settlers did, or set the Dutch oven directly on the hot embers you have made in the fireplace or outside campfire.

Wood Burning - Coal Stoves

Use frying pans or pots on top to cook your meal.

Gas Camp Stoves (white gas, gas, kerosene, propane)

Two burners using white gas will operate 4 hours on 1 quart. Use outdoors only.

Barbecue Grill (5 gallon tank of propane)

Stores well and is easy to use. ***Use outside only***.

Sterno

Works well for small quantities of food.

Volcano

Outdoor cook stove that you can use with 2 Dutch ovens and charcoal. It is very fuel efficient, using about half of the charcoal you would use normally with your Dutch oven. A few briquettes can roast, fry, bake, etc.

Dutch Ovens

A 10" Dutch oven with 6 or 7 briquettes on the lid and 5 or 6 underneath will cook a pot full of food. Use outdoors only.

Hibachi

4 or 5 charcoal briquettes in an 8"x8" Hibachi will generate enough heat to cook a simple meal. Should only be used outdoors.

Charcoal Stove

Turn a #10 can into a charcoal stove. Cut out top and bottom of the can. Punch holes around the top and bottom. Punch many holes in the lid and wire it about half way up the can. Place the charcoal on it to light. Use a sturdy piece of wire screening, or crisscross wire across the top to create a cooking rack.

Flashlights

New batteries last 6 to 7 hours of continuous use. Six-month old batteries last 5-6 hours.

Candles

3/4"x4" will burn approximately 2 hours.

Coleman Mantle Lantern

2 mantle lanterns will burn 5 hours on ½ quart of white gas.

Kerosene Lantern

With a 1 inch wick it will burn 45 hours on 1 quart of kerosene.

Light Sticks

Safest emergency light.

Generators

Excellent source of safe power, however, they use a great deal of fuel. Most run on gasoline burning ½ to 3 gallons per hour. Itemize energy requirements in order to select the appropriate size needed. Use the smallest size possible for less fuel needs. Operate generators in an open area with good ventilation. ***DO NOT ATTACH*** the generator to your house current without approved transfer switches. **The electrical "back feed" can injure or even kill utility workers repairing the power lines**. Large quantities of gasoline are dangerous to store. For more information and/or to calculate wattage needed, go to:

www.powerprotection.org/powergeneration/portablegenerators

Sanitation

Sanitation becomes a real problem and can be the cause of disease during emergencies. ***Wash your hands frequently!*** Substitutes for cleansing without water include: Purel, rubbing alcohol, lotions containing alcohol, shaving lotion, face creams and lotions, towelettes (baby wipes, a wet washcloth).

Toilet with a bag: Remove the water from your toilet bowl and line it with 2 sturdy trash bags. When ½ full, remove the bag, tie it securely for disposal, and store in a covered trash can until disposal service is resumed.

Sanitation Kit (Store in 5 or 6 gallon bucket)

- One 5 or 6 gallon bucket with tight fitting lid, snap on type toilet seat with lid.
- 12 plastic liners (garbage bags)
- 4 pairs of rubber gloves
- 2 tolls of toilet paper
- **Disinfectant:** liquid chlorine bleach, Nilogel clean-up gel, Pinesol, powdered laundry soap, powdered chlorinated lime available at building supply store. It can be used dry. Be sure to get chlorinated lime and not quick lime which is highly alkaline and corrosive
- Bottle of 3% Hydrogen Peroxide
- One box of Baking Soda
- One ½ gallon of white vinegar
- One large bottle of a hand sanitizer
- One roll paper towels
- One pkg. baby wipes
- One 2 liter bottle of water
- One 6 or 10 gallon container with tight fitting lid
- Old newspapers for wrapping garbage.
- Two to three spray bottles
- Feminine hygiene items

Directions for Emergency Toilet:

1. Put two garbage bags as a liner in the 6-gallon bucket and snap on the toilet seat
2. Sprinkle 1 tablespoon of disinfectant in the bucket. The liquid will deodorize the toilet contents. Sprinkle some disinfectant on top after each usage.
3. The toilet is ready to use. Use toilet paper as usual.
4. Use baby wipes or hand sanitizer on hands after each use and dry hands with paper towels.
5. Replace the tight fitting lid after each use of the toilet. The key to disease control is to **KEEP THE LID TIGHTLY COVERED.**
6. When the bag is 1/3 to ½ full, carefully remove the first bag, tie it together and place it in the larger container. Use rubber gloves.
7. Replace liner so the bucket remains double bagged.

Disinfectant: when using bleach, use 1/4 cup bleach to 1 quart water. Other commercial disinfectants include HTH, or calcium hypochlorite, which is available at swimming pool supply stores, also portable toilet chemicals are available through recreational vehicle supply stores.

Waste Disposal: **Never deposit waste or garbage on open ground**. "In times of emergency, the military procedure is to bury human waste in trenches 24"-30" deep and cover with a thin layer of lime." (Earthquake Preparedness, 1989, pg 16) Garbage should be drained and wrapped in several thicknesses of old newspaper to absorb extra moisture. It then can be stored longer before developing unpleasant odors. A tight fitting lid is important to keep out flies. Other rubbish, trash that will not decompose, may need to be burned (with permission from local authorities)

Additional Disinfecting and Odor Control Supplies:

Baking Soda: will help to control odor; it stops mold, fungus or mildew and is a natural whitener. Baking soda relieves heartburn, indigestion and it neutralizes acids in a sour stomach associated with diarrhea. Use 1 teaspoon of baking soda mixed with 2 cups of water and drink it down. Baking soda plus a little salt will help clean your teeth.

3% Hydrogen Peroxide (put in a small spray bottle, no water added) Hydrogen Peroxide is an antiseptic and a cleaning agent for minor cuts and abrasions. It can be used as an oral rinse and gargle. To disinfect toilet seat, just spray it on and wipe off.

White Distilled Vinegar: (put in a small spray bottle, no water added) Studies show that vinegar kills 99% of bacteria, 82% of mold, and 80% of germs (viruses). To disinfect toilet seat, just spray it on and wipe off.

Combining Vinegar & Hydrogen Peroxide: Spraying solutions of vinegar and hydrogen peroxide, one after the other, kills virtually all Salmonella, E. coli bacteria or heavily contaminated surfaces. (Science News 8/8/98; Vol 154, Issue 6, pg 83-85)

Communications

In a wide scale disaster or emergency, the most common means of communication will probably not work. If they do, you will be able to call out of State more easily than locally. Thus, all members of your family should know or have the number of an "out-of-state contact."

Telephones, cellular phones, and pagers will likely be unavailable or of little use for the first few days. Be sure to keep a cell phone charger in your car just in case.

Walkie-talkies or 2-way family radio service (FRS) radios, and CB radios may be very useful. You are likely to experience heavy usage and may not transmit in a timely manner. A supply of batteries is advisable. Rechargeable batteries may be unuseable if there is no power. GMRS radios have a longer range - about 5 miles.

Amateur (HAM) Radio may be operational but operators must be licensed.

"CityWatch" is a county automated notification system that operates as a reverse 911 system. It calls your home to notify ***you*** of emergency situations. In a recent use, the system called 1,600 homes in 30 minutes. The system may not work if your telephone number is unlisted or blocked. This system may repeat the same pre-recorded message two times. Your caller ID may identify the call as being from the Davis County Health Department. Check with your neighbors. If they received a call to evacuate - it probably means you need to evacuate also!

Battery powered standard AM and FM radios will provide emergency alerts and messaging for our area. Radio may function when other forms of communication do not. Tune to KSL 1160 AM Radio.

CERT Volunteers or runners may be used to communicate and coordinate response activity.

Essential Documents

To be prepared for emergencies, there are some important financial and legal documents you need to keep in a safe place where you or your heirs can get them. Sometimes a copy does not have the same validity as the original.

***It is necessary to have the original or a certified copy**.*

- *Living Wills
- *Powers of Attorney
- *Medical Powers of Attorney
- *Wills and Trusts
- *Wills and Trusts
- *Titles and Deeds
- *Birth Certificates
- *Birth Certificates
- *Adoption Decrees
- *Naturalization Records
- *Marriage License
- *Child Custody
- Passports
- Military, Veteran papers
- Social Security
- Drivers License
- ID cards
- Certificates for stocks, bonds, investments
- Insurance policies (life, home, auto)
- List of health and medical information
- List of financial investment information including account numbers
- Important contact information (family, friends, doctors, attorney, insurance)
- Household inventory documentation
- Mortgage
- Genealogy, pictures, and family history

This information could be put on a 3 ½ disk or CD. CAUTION! This information must be safeguarded and protected. In the wrong hands, this information makes identity theft very easy.

How To Make Your Home Safer During Earthquakes

Most injuries, deaths and economic loss in an earthquake are due to man-made problems. Many of the solutions, which limit loss, are simple and inexpensive. If building a new home or considering retrofitting an existing home for seismic protection, seek help from a professional contractor specializing in seismic construction techniques. In the mean time, consider the following suggestions to reduce damage to your property in the event of an earthquake.

• **Secure fixtures such as lights, cabinets, bookcases, and top-heavy objects to resist moving, coming loose, or falling during the shaking. Place heavy objects on lower shelves and securely fasten shelves to walls. Special care should be taken to remove objects from above sleeping areas. Do not hang plants in heavy pots that could swing free of hooks.**

Secure your furniture by using:

"L" brackets, corner brackets or "anodized" aluminum molding to attach tall or top-heavy furniture to the wall.

Corner brackets or eye bolts to secure items located a short distance from the wall.

Attach a wooden or metal guardrail on open shelves to keep items from sliding or falling off.

Fishing line can be used as a less visible means of securing an item (guardrail).

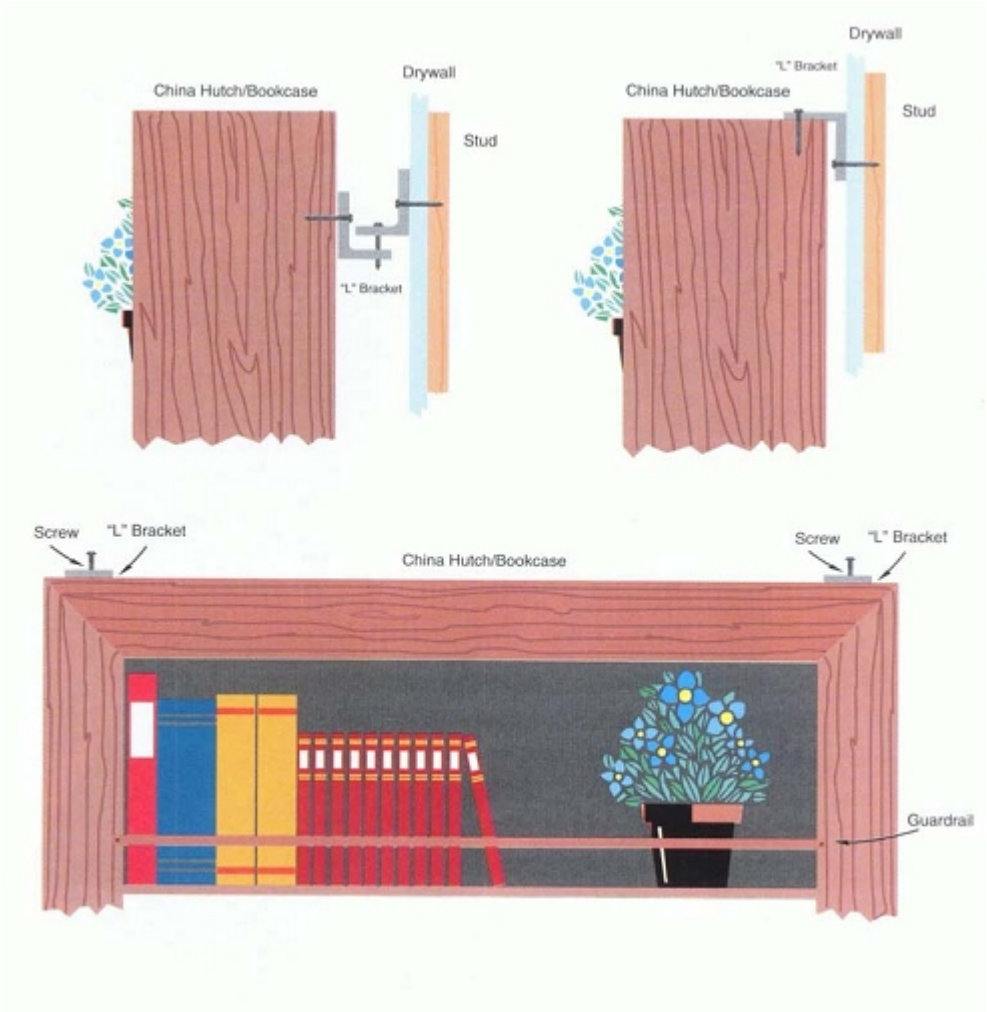

How To Make Your Home Safer During Earthquakes

- **Store bottled goods**, glass, vases, china, and other breakables in low or closed cabinets and use non-skid padded matting, hold fast putty, or velcro whenever possible.

- **Check the electrical wiring and connections to gas appliances.** Defective electrical wiring, leaking gas or inflexible connections are very dangerous in the event of an earthquake.

- **Develop a family plan** which addresses what to do if the earthquake occurs while family members are at home, school, or work. This plan should include a possible central meeting location for family members after the earthquake and an out-of-area contact person so other family members can find out information concerning their loved ones in the disaster area. It is usually easier to call out of a disaster area than it is to call into one.

- **Hold practice drills** so each member of your family knows what to do in an earthquake.

- **Locate master switch and shut-off valves for all utilities** and teach all responsible family members how to turn them off.

- **Is the water heater securely strapped in place?** Strapping the water heater to wall studs and having flexible gas and water lines installed will greatly reduce the risk of fire and water damage in an earthquake.

Water Heater in Corner or in a Closet

Materials

- 3/4x24 gauge perforated steel plumber tape.
- 1/4" diameter x 3" lag screws and flat washers or 1/4" expandable anchors with 2" embedment for concrete or masonry walls.

Directions

- The water heater should be 1" to 12" away from the corner walls.
- Locate the wall studs on both sides of the water heater (not behind it).
- Anchor plumber's tape (a flexible steel strap) to a wall stud with a 1/4" diameter x3" lag screw and flat washer.
- From about 9" from the top of the tank, wrap the plumber's tape all the way around the tank in a clockwise direction. Then anchor the tape to the stud on the other wall. Make sure the tape is tight.

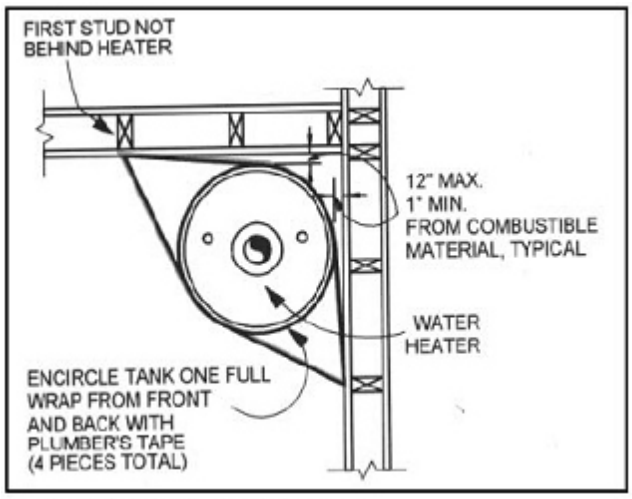

Overhead view of water heater in corner

- Repeat the process, again about 9" from the top of the tank, but this time wrap the tape in a counter clockwise direction.

- Repeat the process two more times about 4" from the bottom of the tank. Wrap one band of tape in a clockwise direction and the other band of tape in a counter clockwise direction.

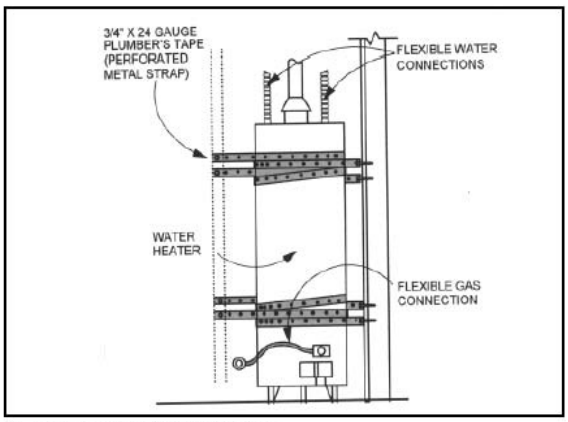

Side view of water heater in corner

Water Heater on Straight Wall

- ¾" x 24 gauge perforated steel plumber's tape.
- ½" diameter conduit
- ¼" diameter x 1" round head washers.
- ¼" diameter x 3" lag screws and flat washer or ¼" expandable anchors with 2"embedment for concrete or masonry walls.

Directions

- The water heater should be 1" to 12" away from the wall.
- Locate the wall studs on both sides of the water heater (not behind it)
- Wrap plumber's tape around the tank 9" from the top and 4" from the bottom. Secure tape with round head machine screw, flat washers and nut.
- Cut four pieces of conduit to size. The conduit is used as angle bracing from the wall studs to the tank. Flatten 1" at each end of the conduit and bend 45 degrees. Drill holes ½ " from each end.
- Anchor the conduit to the wall studs. Use 1/4" diameter x3" lag screw and flat washer. Then anchor the conduit to the plumber's tape. Use 1/4" diameter x1" round head machine screw, washer and nut.

If you're using gas, have your utility company or a licensed plumber install a flexible hose where the gas line connects to the water heater at its base. Install flexible hoses for the water connections as well.

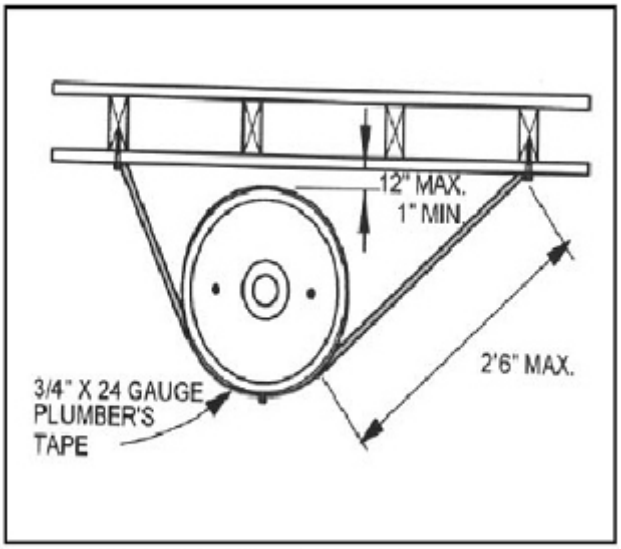

Overhead view of water heater on straight wall

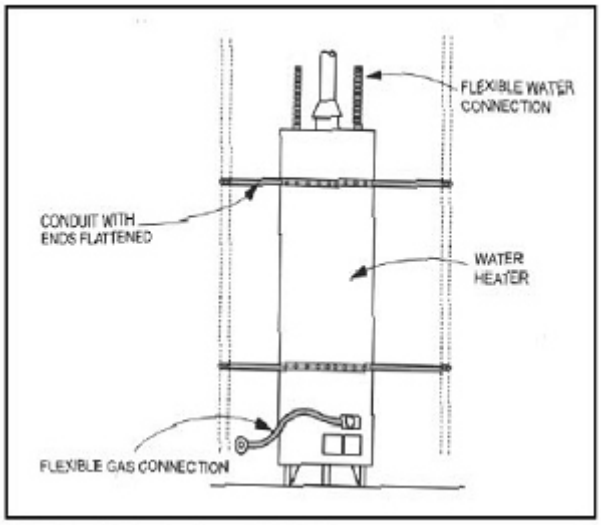

Side view of water heater on straight wall

BE INFORMED

Emergency Basics

BEFORE AN EMERGENCY

1. Know how to turn off gas, water and electricity to your home.
2. Know basic first aid.
3. Have a "72 Hour Emergency Kit" readily available.
4. Keep your car with at least a half tank of gas.
5. Have a plan for reuniting your family. Have one meeting place outside your home and another outside the immediate neighborhood.
6. Have an "out of area" contact person. Every family member needs to know the number or have it with them.
7. Have operational smoke alarms, carbon monoxide alarms and fire extinguishers installed.
8. Children at school - make sure your list of adults authorized to pick up your children is current and complete. Tell older children who self transport to follow the instructions of authorities.
9. Know your neighbor's skills and needs. Plan how you could help others with special needs, helping the elderly and disabled. Provide child care if children come from school and parents cannot get home. Working together as neighbors can save lives and property.
10. Have a "Home Hazard Hunt"

    - Repair defective electrical wiring and leaky gas connections.
    - Secure water heater with straps to stud walls.
    - Fasten shelves securely.
    - Place large heavy objects on lower shelves.
    - Hang pictures and mirrors away from beds.
    - Brace overhead light fixtures, china cabinets, bookcases, top heavy objects.
    - Store weed killers, pesticides and flammable products away from heat.
    - Clean and repair chimneys, flu pipes, vent connections and gas vents.
    - Place oily rags or waste in covered metal cans.
    - Clear surrounding brush or weeds 30 feet from home.
    - Take care of anything that could move, fall, break or cause a fire.

DURING AN EMERGENCY

1. **STAY CALM**, **REASSURE OTHERS** (especially young children); **THINK** through the consequences of any action.
2. **DO NOT TIE UP TELEPHONE LINES** needed for emergency operations.
3. **LISTEN** to portable radio for all weather service advisories (KSL 1160 AM)
4. **FOLLOW ADVICE OF LOCAL AUTHORITIES**. If you are told to evacuate, do so promptly. If told to go to a certain location, go straight there and check in.

AFTER AN EMERGENCY

1. Check for injuries. Provide first aid
2. Check for safety using a light stick or flashlight. Check for gas, water, or sewage breaks, check for downed electric lines and electrical shorts. Turn off appropriate utilities only if you suspect the lines are damaged or if you are instructed to do so.

"If you turn the gas off, you will need a professional to turn it back on." FEMA

3. Check for home hazards, fire dangers, or dangerous spills. Be aware that spilled bleaches, gasoline and other liquids may produce deadly fumes when chemicals mix. Get advice from emergency personnel on how to clean up spilled liquids, especially if there are noxious fumes.
4. Listen to the radio for specific instructions from Public Safety agencies.
    - Local media will announce change in school openings and closings.
5. Wear shoes.
6. Stay off the telephone except to report emergencies.
7. Check on neighbors, especially the elderly, disabled or those with small children.
8. After the emergency is over, let relatives know how and where you are.

In Case Of . . .

EARTHQUAKES - BEFORE

Follow Emergency Basics 1-9 plus know the earthquake plan for your children's school. Discuss it with them.

Triangle of Life

When buildings collapse, the weight of the ceiling falls upon objects or furniture inside the building and crushes the objects, leaving a space or void next to them. **This space is called the "triangle of life**." The larger and stronger the object is, the less it will compact. The less the object compacts, the larger the void is with a greater probability that the person who is using this void for safety will not be injured.

Earthquake Drills

- **IDENTIFY SAFE SPOTS** in each room.
- "**ACT OUT**" getting to a safe spot in less than 2 seconds and get in a fetal position.
- **IDENTIFY DANGER ZONES** to stay away from such as bookcases, windows and furnishings that could fall.

EARTHQUAKES - DURING

1. Curl up in a fetal position during an earthquake. **You can survive in a smaller void**. Get next to an object, such as a sofa, or next to a large bulky object that will compress slightly but leave a void next to it.
2. Wooden buildings are the safest type of construction to be in during an earthquake. Wood is flexible and moves with the force of the earthquake. **If the wooden building collapses, large survival voids are created.**
3. If you are in bed and an earthquake occurs, simply roll off the bed and get in a fetal position. A safe void will exist around the bed.
4. **IT IS NOT SAFE TO STAND UNDER DOORWAYS OR STAIRS DURING AN EARTHQUAKE**.
5. Get near the outer wall of buildings or outside of them, if possible. It is much better to be near the outside of the building rather than the interior. The farther inside you are from the outside perimeter of the building, the greater the probability that your escape route will be blocked.
6. If you're in a car during an earthquake, get out of the car and sit or lie next to it in a fetal position.
7. **STAY CALM, REASSURE OTHERS**. Expect loud noises. Sounds will come from the motion of the ground, from the structure of the building, and from falling objects.

EARTHQUAKES - AFTER

Be prepared for additional aftershocks.

1. Check for injuries - provide emergency first aid. Do not try to move seriously injured persons.
2. Be prepared to respond to psychological needs created by the trauma of the experience. Stay with small children; they fear separation during times of stress.
3. Check for safety. Turn off appropriate utilities. Check for gas, water, sewage breaks.

   - Check for downed electric lines and shorts.
   - Check for fire hazards, chemical spills, toxic fumes. If there is leaking gas, leave the house and report to authorities.
   - Check building for cracks around chimney and foundation.
   - Open cabinets and closets carefully and be ready for falling objects

4. Flashlights or light sticks are safe: Do not turn on electrical switches, light matches, or create sparks until you are sure there are no gas leaks.
5. Wear shoes. Clean up dangerous spills and broken glass and debris.
6. Listen to the radio for specific instructions from Public Safety agencies.
7. Stay off the telephone except to report emergencies.
8. Stay out of severely damaged buildings. Aftershocks may finish them off.
9. Confine or leash frightened pets.
10. **NEVER ASSUME DOWNED POWER LINES ARE DEAD** or you may be! People, metal and damp objects are good electrical conductors. To avoid shock and serious burns, stay back.
11. Do not go sightseeing.
12. Notify family to let them know how and where you are. If you must leave, leave a message of your intended route and destination and who is with you.
13. Practice strict sanitation.

In Case Of . . .

POWER OUTAGE - BEFORE

1. Know the location of the electrical fuse box and circuit breaker.
2. Have antifreeze.
3. Have emergency supplies:
   - water
   - food
   - first aid
   - flashlight, etc

POWER OUTAGE - DURING

1. Unplug all major appliances. When the power comes on, the power surge could ruin appliances.
2. Report any downed power lines.
3. DO NOT OPEN the refrigerator and freezer doors.
4. In case of long term power failure in the winter, you may need to winterize your home to protect your pipes from freezing.
   - Shut off the water at the street
   - Drain all the water from your pipes at the lowest faucet. Flush all toilets so there is no water left in them.
   - Turn off the gas to the water heater and drain it.
   - Pour one cup of antifreeze in all drains, toilet bowls and toilet tanks.
5. Leave for a location with power or stay in your home. If you stay, it is easier to heat one room than the whole house.

POWER OUTAGE - AFTER

1. When the power comes on, plug in appliances one by one to prevent overloading the system.
2. Turn the water back on. Be sure all taps are turned off first.
3. Check the food in the refrigerator/freezer. If the door is not opened, food in the refrigerator should stay cold up to 6 hours. Foods *"warmer than refrigeration*" temperatures more than 2 hours should be discarded. If food from the freezer is still as cold as refrigeration temperatures, it can be eaten but do not re-freeze. Meat that still has ice crystals can safely be re-frozen. If meat is thawed and "refrigeration cold" it can be cooked and eaten or re-frozen. In a well filled freezer, food will have ice crystals for about 3 days. (USU Extension)

HIGH WINDS - BEFORE

1. Secure objects such as outdoor furniture, tools, trash cans, etc.
2. Have emergency supplies: water, food, first aid, etc.
3. Listen to the radio for weather updates.
4. Be prepared to board or tape up windows.
5. Open a window at the opposite end of the house about 1inch to relieve pressure.

HIGH WINDS - DURING

1. Take shelter in center hallways, closets or basement areas away from windows.
2. Avoid areas where flying objects may hit you.

HIGH WINDS - AFTER

1. Clean up.
2. Windows: use duct tape and plastic to mend if cracked; plywood to board up if broken.

THUNDER & LIGHTNING - INDOORS

1. Stay away from open doors, windows, fireplaces.
2. Close the curtains to protect you from shattered glass.
3. Don't use electrical equipment (hair dryers, electric blankets, etc) during the storm.
4. Don't use the telephone except for emergency. Lightning may strike telephone lines.

THUNDER & LIGHTNING - OUTDOORS

1. Don't use metal objects (lawn mowers, fishing rods, golf clubs.) Remove metal cleated golf shoes.
2. Get out of the water and off of small boats.
3. Avoid being the highest object in any area. **If you feel an electrical charge** (your hair stands on end or skin tingles) drop to the ground in a crouched position with hands on knees and your head between them. **DO NOT** lie flat on the ground.

THUNDER & LIGHTNING - FIRST AID

1. Persons struck by lightning receive a severe electrical shock and may be burned where the lightning entered and left the body, but they can be handled safely. They carry no electrical charge.
2. Persons can be revived by prompt mouth to mouth resuscitation, cardiac massage and prolonged artificial respiration.

In Case Of . . .

BLIZZARDS - RURAL AREAS

If you are trapped in a car by a blizzard:

1. Stay in the vehicle. Do not attempt to walk out. Disorientation occurs quickly in blowing, drifting snow.
2. Avoid overexertion from trying to push the car out or shoveling heavy drifts.
3. Run the motor only about 10 minutes each hour for heat and only with a rear window slightly open for ventilation. Be cautious of carbon monoxide poisoning; make sure the exhaust pipe does not become blocked with snow.
4. Make yourself visible: raise the hood, tie red cloth to the antenna.
5. Keep winter coats, shoes, blankets, gloves, water, matches, and a candle in a tin can in your car.

BLIZZARDS - URBAN AREAS

If you are trapped in a car by a blizzard:

1. Keep coats and gloves in your car.
2. Call for police or roadside assistance with cell phone.
3. Seek help from nearest business, school, church.

FLOODS - BEFORE

1. Find out if your residence is in a probable flood area. Make a plan what to do and where to go.
2. Store emergency supplies: water, food, first aid, medications, documents, radio, flashlights, etc.
3. Listen to the radio or TV for changing weather conditions.
4. Place sandbags, lumber, plastic sheeting, etc. in strategic places. (Sandbags should be stacked away from the building far enough to avoid damaging the walls.)
5. Make sure vehicles have at least a half tank of gas at all times in case of evacuation.
6. Prepare for evacuation.
7. Move valuables and emergency supplies to an upper floor or as high as possible.

FLOODS - DURING

1. Stay calm.
2. If there is time, disconnect all gas and electric appliances. Shut off the main water valve to keep contaminated water from entering the house. Shut off the power at the main breaker.

Remember, if you shut off the gas, a professional will have to come and turn it back on.

3. Listen for further instructions on the emergency frequency of your radio. (KSL 1160 AM)

FLOODS - AFTER

1. Do not return home until local authorities say that it is safe.
2. Check your home carefully for structural damage, gas leaks and downed electrical wires.
3. Don't use electrical appliances that have been flooded until repaired.
4. Don't use food that has been contaminated by flood waters.
5. Don't drink water until authorities say it is safe to do so.
6. Clean everything. Flood water carries contaminants and disease. Throw out all wet food, medicines, and cosmetics.

FIRES - PREVENTION

1. Practice fire resistant housekeeping, discard rubbish, trash, oily rags in metal cans outside home. Use proper size fuses, replace frayed cords, don't overload electrical outlets.
2. Store flammable liquids outside the home in tightly closed metal containers.
3. Maintain smoke detectors and fire extinguishers in working order.
4. Keep garden hose near the faucet, especially in the winter when fire danger is the greatest.
5. Keep oak brush, weeds, etc. cut back at least 30 feet from the house.

BASIC FIREFIGHTING

1. Keep an escape route between you and the fire.
2. Point the fire retardant at the base of the fire in a sweeping motion.
3. If your clothes catch on fire: **STOP, DROP, ROLL**.
4. **ESCAPE**. **GET OUT FAST**! Have two ways out of every room. Don't stop to dress, gather pets, valuables or toys. Smoke and toxic gasses rise and can kill you in minutes. Crawl on your hands and knees. Take short, small breaths. Cover mouth with a cloth if possible. If a door is hot, do not open it. Keep doors and windows closed. **ONCE YOU'RE OUT, DO NOT GO BACK IN!** Have a pre-arranged meeting place outside. When 2 people arrive, 1 person should leave to call the fire department. The 2nd person should stay to tell the family the 1st person has gone so no-one tries to go back in to find him.

In Case Of . . .

ELECTRICAL FIRES

Be sure to shut off the electricity first, then put out the flames with an extinguisher, water or other fire retardant. **If you can't shut off the electricity, do not use water on an electrical fire**.

OIL, GREASE, GASOLINE FIRE

Smother the flames. Use your fire extinguisher, a pot lid, bread board, salt, baking soda, or earth. **DO NOT USE WATER!**

GAS FIRE

Shut off the gas supply. Use a fire extinguisher, sand, or earth.

CHEMICAL - ON THE SCENE

1. If you witness a chemical emergency, stay clear of the chemical and vapors or smoke. CALL 911.
2. If you are in a vehicle, close the windows, turn off the air systems, and leave the area.

CHEMICAL - NOTIFICATION

Orders to "evacuate" or "shelter-in-place" may be given if there is a threat to the community.

You may be notified by:

1. City Watch - a reverse 911 system with a pre-recorded message.
2. A knock on the door by uniformed fire or police personnel or by CERT volunteers.
3. An announcement by loud speaker from an official police or fire department vehicle.
4. The Emergency Alert System on TV or Radio.
5. Sirens at a local refinery or business.
6. Neighborhood block captain

If Your Neighbors Tell You They Received Notification to Evacuate, It Probably Applies To You Too!

CHEMICAL - EVACUATE

If you are requested to evacuate, directions may be provided for safe routes to follow. Go to a designated shelter "Reception Center" to check in, then you may go to another safe location (home of a relative or friend, motel, etc.)

1. Take 72 hour kits - include all necessary medications for extended period of time.
2. Shut off all appliances.
3. Leash or cage pets and/or take them with you, if possible. Most shelters will not accept pets..
4. Lock all doors and windows. Leave a message as to where you have gone.
5. Follow given evacuation routes.

CHEMICAL - SHELTER IN PLACE

This is a method of protecting yourself, family, and small pets from the effects of a released chemical.

1. If possible, bring pets inside.
2. Go inside, close and lock all doors and windows to the outside.
3. Turn off all heating/air conditioning systems and switch vents to the "closed" position.
4. Close all fire place dampers.
5. Go to one room and:
   - Use a basement room only as a last resort. Some chemicals are heavier than air and may seep into basements.
   - Choose a room with a bathroom attached, if possible.
   - Seal all windows, doors, and vents with plastic sheeting, wax paper, or other material and tape. Include spaces around pipes.
   - Place damp towels under doorways
   - Close the drapes/shades over windows and stay away from the windows.
6. Remain in place until you are told by police or fire personnel or through radio/TV broadcasts that it is safe to leave.
7. When the chemical emergency is over, open all doors and windows for ventilation.

Utah Homeland Security

Shortly after September 11, 2001, Governor Mike Leavitt directed the creation of the Utah Homeland Security Task Force (HLS). Its mission is to secure and protect the safety, health, well being and rights of all people in Utah from man-made threats. The Homeland Security Advisory System provides a means to distribute information regarding the risk of terrorist acts to Federal, State and local authorities and the American people. The threat level warnings are issued as follows:

RED – SEVERE RISK

Terrorist attack has occurred or one is imminent. Comes from a specific location or critical facility.

- Expect delays, bag search, and heavy traffic.
- Restrictions to public buildings
- Avoid crowded gatherings.
- Do not travel in areas affected.
- Keep emergency supplies accessible.
- Report suspicious people.
- Monitor "Emergency Alert" news

YELLOW - ELEVATED RISK

Elevated risk of terrorist attack but no specific region or target identified.

- Continue normal activities but report suspicious activities.
- Take a first aid or CERT class. Become active in Neighborhood Watch.
- Network with family, neighbors & community for support during attack.
- Learn about critical facilities in your community and report suspicious activities near them.

ORANGE - HIGH RISK

Indications that there is a high risk of local terrorist attack but no specific target.

- Continue normal activities but expect delays.
- Continue to monitor world and local events.
- Avoid leaving unattended packages, etc. in public area.
- Inventory emergency supply kits.
- Discuss family emergency plan.
- Be alert to your surroundings & monitor your children.
- Maintain close contact with family and neighbors.

GREEN - GUARDED RISK

General risk, no credible threats or target.

- Continue normal activities but be watchful for suspicious activities.
- Increase family emergency preparedness, supplies, food, water & emergency family plan.
- Monitor local and national news.
- Update immunizations.

LOW RISK - LOW RISK TERRORISM

Routine security is implemented.

- Continue to enjoy individual freedom.
- Be prepared for disaster & family emergencies.
- Support the efforts of your local emergency responders.
- Know what natural hazards are prevalent in your area and what you can do to protect your family.

Overview of Possible Threats

BE INFORMED

Disaster preparedness is no longer the sole concern of earthquake pone Californians and those who live in the part of the country known as "Tornado Alley." For Americans, preparedness must now account for man-made disasters as well as natural ones. Knowing what to do during an emergency is an important part of being prepared and may make all the difference when seconds count.

BIOLOGICAL THREAT

A biological attack is the deliberate release of germs or other biological substances that can make you sick. Many agents must be inhaled, enter through a cut in the skin or be eaten to make you sick. Some biological agents, such as anthrax, do not cause contagious diseases. Others, like the smallpox virus, can result in diseases you can catch from other people.

Unlike an explosion, a biological attack may or may not be immediately obvious. Although it is possible that you will see signs of a biological attack, as was sometimes the case with the anthrax mailings, it is perhaps more likely that local health care workers will report a pattern of unusual illness or there will be a wave of sick people seeking emergency medical attention. You will probably learn of the danger through an emergency radio or TV broadcast, or some other signal used in your community. You might get a telephone call or emergency response workers may come to your door.

In the event of a biological attack, public health officials may not immediately be able to provide information on what you should do. It will take time to determine exactly what the illness is, how it should be treated, and who is in danger; however, you should watch TV, listen to the radio, or check the internet for official news including the following:

- Are you in the group or area authorities consider in danger?
- What are the signs and symptoms of the disease?
- Are medications or vaccines being distributed?
- Where? Who should get them?
- Where should you seek emergency medical care if you become sick?

BIOLOGICAL EMERGENCY

If a family member becomes sick, it is important to be suspicious.

- Do not assume, however, that you should go to a hospital emergency room or that any illness is the result of the biological attack. Symptoms of many common illnesses may overlap.
- Use common sense, practice good hygiene and cleanliness to avoid spreading germs, and seek medical advice.
- Consider if you are in the group or area authorities believe to be in danger.
- If your symptoms match those described and you are in the group considered at risk, immediately seek emergency medical attention.

If you are potentially exposed:

- Follow instructions of doctors and other public health officials.
- If the disease is contagious, expect to stay away from others or even quarantined.
- For non-contagious diseases, expect to receive medical evaluation and treatment.

Overview of Possible Threats

If you become aware of an unusual and suspicious substance nearby:

- Quickly get away. Do not wait to be told!
- Protect yourself. Cover your mouth and nose with layers of fabric that can filter the air but still allow breathing. Examples include 2 to 3 layers of cotton such as a t-shirt, handkerchief or towel. Otherwise, several layers of tissue or paper towels may help.
- Wash with soap and water.
- Contact authorities.
- Watch TV, listen to the radio, or check the internet for official news and information including what the signs and symptoms of the disease are, if medications or vaccinations are being distributed and where you should seek medical attention if you become sick.
- If you become sick, seek emergency medical attention.

CHEMICAL THREAT

A chemical attack is the deliberate release of a toxic gas, liquid or solid that can poison people and the environment. It is most likely to happen in a crowded place.

Possible Signs of a Chemical Threat:

- Many people suffering from watery eyes, twitching, choking, having trouble breathing or losing coordination.
- Many sick or dead birds, fish, or small animals are also cause for suspicion.

If You See Signs of Chemical Attack:

- ***FIND CLEAN AIR QUICKLY***!
- Quickly try to define the impacted area where the chemical is coming from, if possible.
- Take immediate action to get away.
- If the chemical is inside a building where you are, get out of the building without passing through the contaminated area, if possible.
- If you can't get out of the building or find clean air without passing through the area where you see signs of a chemical attack, move as far away as possible and "shelter-in-place."
- If you are outside, quickly decide what is the fastest way to find clean air. Consider if you can get out of the area or if you should go inside the closest building and "shelter-in-place."

If you have been exposed to a Chemical:

If your eyes are watering, your skin is stinging and you are having trouble breathing, you may have been exposed to a chemical.

- If you think you may have been exposed to a chemical, strip immediately and wash.
- Look for a hose, fountain, or any source of water, and wash with soap, if possible, being sure not to scrub the chemical into your skin.
- Seek emergency medical attention.

EXPLOSION

If There is an Explosion:

- Take shelter against your desk or a sturdy table.
- Exit the building ASAP.
- Take your emergency supply kit if time allows.
- Do not use elevators.
- Check for fire and other hazards.

If There is a Fire:

- Exit the building ASAP.
- Crawl low if there is smoke.
- Use a wet cloth, if possible, to cover your nose and mouth.
- Use the back of your hand to feel the upper, lower, and middle parts of closed doors.
- If the door is hot, do not open it. Look for another way out.
- Do not use elevators.
- If you catch fire, do not run. **Stop, Drop, Roll** to put out the fire.
- If you are at home, go to a previously designated meeting place.
- Account for your family members and carefully supervise small children.
- Never go back into a burning building.

Overview of Possible Threats

If You are Trapped in Debris:

- If possible, use a flashlight to signal your location to rescuers.
- Avoid unnecessary movement so that you don't kick up dust.
- Cover your nose and mouth with anything you have on hand. (Dense weave cotton material can act as a good filter. Try to breathe through the material).
- Tap on a pipe or wall so that rescuers can hear where you are.
- If possible, use a whistle to signal rescuers.
- Shout only as a last resort. Shouting can cause a person to inhale dangerous amounts of dust.

NUCLEAR BLAST

A nuclear blast is an explosion with intense light and heat, a devastating pressure wave and intense release of widespread radioactive material. It can contaminate the air, water, and ground surfaces for miles around (heat blast, radiation.) During a nuclear incident, it is important to avoid radioactive material, if possible, While experts may predict at this time that a nuclear attack is less likely than other types, terrorism by its nature is unpredictable.

Advanced warning of an attack:

If there is advance warning of an attack, take cover immediately, as far below ground as possible, though any shield or shelter will help protect you from the immediate effects of the blast and the pressure wave.

No warning of an attack:

- Quickly assess the situation.
- Consider if you can get out of the area or if it would be better to go inside a building to limit the amount of radioactive material you are exposed to.
- If you take shelter, go as far below ground as possible, close windows and doors, turn off air conditioners, heaters, or other ventilation systems. Stay where you are, watch TV, listen to the radio, or check the internet for official news as it becomes available.
- To limit the amount of radiation you are exposed to, think about distance and time.

  - ★ **Shielding**: If you have a thick shield between yourself and the radioactive materials, more of the radiation will be absorbed and you will be exposed to less.
  - ★ **Distance**: The farther away you are away from the blast and the fallout, the lower your exposure.
  - ★ **Time**: Minimizing time spent exposed will reduce your risk.

Use available information to assess the situation. If there is a significant radiation threat, health care authorities may or may not advise you to take potassium iodide.

Potassium iodide is the same substance added to your table salt to make it iodized. Consider keeping potassium iodide in your emergency kit; learn what the appropriate doses are for each of your family members. Plan to speak with your health care provider in advance about what makes sense for your family.

For more information, see Potassium Iodide from Centers for Disease Control

For more general information, see "Are you Ready?" from Federal Emergency Management Agency.

Overview of Possible Threats

RADIATION THREAT

A radiation threat, commonly referred to as a "dirty bomb" or "radiological dispersion device (RDD)", is the use of common explosives to spread radioactive materials over a targeted area. Radioactive material may come from medical equipment or other radioactive devices. It is not a nuclear blast. The force of the explosion and radioactive contamination will be more localized. While the blast will be immediately obvious, the presence of radiation will not be clearly defined until trained personnel with specialized equipment are on the scene. As with any radiation, try to limit exposure. It is important to avoid breathing radiological dust that may be released in the air

If there is a radiation threat or "Dirty Bomb":

- If you are outside and there is an explosion or authorities warn of a radiation release nearby, cover your nose and mouth and quickly go inside a building that has not been damaged. If you are already inside, check to see if your building has been damaged. If your building is stable, stay where you are. Close windows and doors; turn off air conditioners, heaters or other ventilation systems.
- If you are inside and there is an explosion near where you are or you are warned of a radiation release inside, cover nose and mouth and go outside immediately. Look for a building or other shelter that has not been damaged and quickly get inside. Once you are inside, close windows and doors; turn off air conditions, heaters, or other ventilation systems.
- If you think you have been exposed to radiation, take off your clothes and wash as soon as possible.
- Stay where you are, watch TV, listen to the radio, or check the Internet for official news as it becomes available.
- **Remember** to limit the amount of radiation you are exposed to, think about shielding, distance and time.

★ **Shielding**: If you have a thick shield between yourself and the radioactive materials, more of the radiation will be absorbed and you will be exposed to less.

★ **Distance**: The farther away you are away from the blast and the fallout, the lower your exposure.

★ **Time**: Minimizing time spent exposed will reduce your risk

As with any emergency, local authorities may not be able to immediately provide information on what is happening and what you should do, however, you should watch TV, listen to the radio, or check the Internet often for official news and information as it becomes available.

For more general information, see "Are you Ready?" from Federal Emergency Management Agency.

Other Sources of Information

www.bountifulutah.gov (**Bountiful City**)
www.beprepared.com - (**Emergency Essentials)**
www.bt.cdc.gov (**CDC - Emergency Preparedness & Response**)
www.citizencorps.gov/programs/cert.shtm (**Community Emergency Response**)
www.des.ut.gov (**Utah State Division of Emergency Services & Homeland Security**)
www.disaster-resource.com (**Disaster Resource Guide**)
www.fema.gov (**Federal Emergency Management Agency**)
www.missingkids.com (**National Center Missing & Exploited Children**)
www.geology.utah.gov (**Utah Geological Survey**)
www.hlunix.hl.state.ut.us/ (**Utah Department of Health**)
www.nws.noaa.gov (**National Weather Service**)
www.neic.usgs.gov (**National Earthquake Information Center**)
www.nod.org/emergency/index (**National Organization on Disability, Emergency Preparedness**)
www.providentliving.org (**LDS Church - Guide to Food Storage, Preparation**)
www.ready.gov (**US Department of Homeland Security**) Good information
www.redcross.org/services/disaster/ (**American Red Cross**)
www.utahredcross.org (**Greater Salt Lake Area Chapter**)
www.training.fema.gov/emiweb/CERT/ (**CERT Training**)
www.depts.washington/edu/learncpr/index,html (**Learn CPR. You Can do It!)**
www.quake.utah.edu (**University of Utah Seismograph Stations**)
www.powerprotection.org/powergeneration/portablegenerators.shtml (**Power Protection - Portable Generator**)

Check Google or other web search engines for Emergency Preparedness products and information. This is a partial list and is intended for information only

Bountiful City does not endorse all of the above listed web sites.

Notification For Emergency Personnel

The following colored paper should be taped on the front door or the front of your house where it may be easily spotted by Emergency Services personnel

GREEN	**"ALL IS WELL"**
YELLOW	**"WE NEED HELP BUT IT IS NOT CRITICAL"**
RED	**'WE NEED IMMEDIATE HELP"**
BLACK	**"THERE IS A DECEASED PERSON HERE'**
	(The black card is used in conjunction with any of the other four colors of paper, depending on the situation)
WHITE	**"THIS HOME IS VACANT"** **"NOBODY IS HOME"** **"ALREADY EVACUATED"**
	(Use caution when using the white cards. You don't want to advertise to potential looters that no-one is home.)

ALL IS WELL

WE NEED HELP BUT IT IS NOT CRITICAL

WE NEED

IMMEDIATE

HELP

THERE IS
A
DECEASED
PERSON
HERE

NOBODY IS HOME

THIS HOME IS VACANT

ALREADY

EVACUATED

We have gone to:_____

Phone: _____

We includes: _____

EMERGENCY PHONE NUMBERS

Bountiful City Numbers

Bountiful Police Department 298-6000
Life Threatening Emergency 911
South Davis Metro Fire
255 South 100 West 677-2400
400 North 500 West 677-8501
1995 South Bountiful Blvd 677-8401

Bountiful Power 298-6072
Bountiful Streets 298-6175
Bountiful Water 298-6180
Bountiful Mayor 298-6138
Bountiful City Manager 298-6140

Other Important Numbers

FBI 579-1400
FEMA 1-202-566-1600
Homeland Security 593-9400
Questar Gas 1-800-541-2824
. . . . . or 324-5111
Poison Control Center 1-800-222-1222
Red Cross (Salt Lake Chapter) 323-7000
Red Cross 1-866-438-4636
Suicide Prevention 261-1442
Teen Line (after 6 p.m. M-F) 451-8336
Utah DES (Department of Emergency Services) 1-800-753-2858
Utah Highway Patrol (non-emergency) 447-8120
Weber Basin Water 771-1677

Hospitals

Davis Hospital 807-1000
LDS Hospital 408-1100
Lakeview 299-2200
McKay Dee Hospital 627-2800
Ogden Regional 479-2111
Primary Children's Hospital 588-2000

Schools

Bountiful High School 402-3900
Viewmont High School 402-4200
Bountiful Junior High 402-6000
Millcreek Junior High 402-6200
Mueller Park Junior High 402-6300
South Davis Junior High 402-6400
Boulton Elementary 402-1300
Bountiful Elementary 402-1350
Holbrook Elementary 402-1450
Meadowbrook Elementary 402-1600
Muir Elementary 402-1550
Oakhills Elementary 402-1650
Tolman Elementary 402-1900
Valley View Elementary 402-2050
Washington Elementary 402-1950